HYPERTHERM®
A Hypertherm Associates Brand

Powermax65/85/105 SYNC®

Operator Manual

810470 – REVISION 4

ENGLISH

Register your new Hypertherm system

Benefits of registration

- ☑ **Safety:** Registration allows us to contact you in the unlikely event a safety or quality notification is required.
- ☑ **Education:** Registration gives you free access to online product training content via the Hypertherm Cutting Institute.
- ☑ **Confirmation of ownership:** Registration can serve as proof of purchase in case of an insurance loss.

Go to **www.hypertherm.com/registration** for easy and fast registration.

If you experience any problems with the product registration process, please contact registration@hypertherm.com.

For your records

Serial number: _____

Purchase date: _____

Distributor: _____

_____

_____

Maintenance notes: _____

_____

_____

_____

_____

Powermax, SYNC, SmartSYNC, FastConnect, and Hypertherm are trademarks of Hypertherm, Inc. and may be registered in the United States and other countries. All other trademarks are the property of their respective holders.

Environmental stewardship is one of Hypertherm's core values, and it is critical to our success and our customers' success. We are striving to reduce the environmental impact of everything we do. For more information: www.hypertherm.com/environment.

© 2021-2022 Hypertherm, Inc.

Powermax65/85/105 SYNC

Operator Manual

810470
REVISION 4

ENGLISH
Original instructions

May 2022

Hypertherm, Inc.
Hanover, NH 03755 USA
www.hypertherm.com

Hypertherm, Inc.
21 Great Hollow Road, P.O. Box 5010
Hanover, NH 03755 USA
603-643-3441 Tel (Main Office)
603-643-5352 Fax (All Departments)
info@hypertherm.com (Main Office)
800-643-9878 Tel (Technical Service)
technical.service@hypertherm.com (Technical Service)
800-737-2978 Tel (Customer Service)
customer.service@hypertherm.com (Customer Service)

Hypertherm México, S.A. de C.V.
52 55 5681 8109 Tel
52 55 5681 7978 Tel
soporte.tecnico@hypertherm.com (Technical Service)

Hypertherm Plasmatechnik GmbH
Sophie-Scholl-Platz 5
63452 Hanau
Germany
00 800 33 24 97 37 Tel
00 800 49 73 73 29 Fax
31 (0) 165 596900 Tel (Technical Service)
00 800 4973 7843 Tel (Technical Service)
technicalservice.emeia@hypertherm.com (Technical Service)

Hypertherm (Singapore) Pte Ltd.
Solaris @ Kallang 164
164 Kallang Way #03-13
Singapore 349248, Republic of Singapore
65 6841 2489 Tel
65 6841 2490 Fax
marketing.asia@hypertherm.com (Marketing)
techsupportapac@hypertherm.com (Technical Service)

Hypertherm Japan Ltd.
Level 9, Edobori Center Building
2-1-1 Edobori, Nishi-ku
Osaka 550-0002 Japan
81 6 6225 1183 Tel
81 6 6225 1184 Fax
htjapan.info@hypertherm.com (Main Office)
techsupportapac@hypertherm.com (Technical Service)

Hypertherm Europe B.V.
Vaartveld 9, 4704 SE
Roosendaal, Nederland
31 165 596907 Tel
31 165 596901 Fax
31 165 596908 Tel (Marketing)
31 (0) 165 596900 Tel (Technical Service)
00 800 4973 7843 Tel (Technical Service)
technicalservice.emeia@hypertherm.com (Technical Service)

Hypertherm (Shanghai) Trading Co., Ltd.
B301, 495 ShangZhong Road
Shanghai, 200231
PR China
86-21-80231122 Tel
86-21-80231120 Fax
86-21-80231128 Tel (Technical Service)
techsupport.china@hypertherm.com (Technical Service)

South America & Central America: Hypertherm Brasil Ltda.
Rua Bras Cubas, 231 – Jardim Maia
Guarulhos, SP – Brasil
CEP 07115-030
55 11 2409 2636 Tel
tecnico.sa@hypertherm.com (Technical Service)

Hypertherm Korea Branch
#3904. APEC-ro 17. Heaundae-gu. Busan.
Korea 48060
82 (0)51 747 0358 Tel
82 (0)51 701 0358 Fax
marketing.korea@hypertherm.com (Marketing)
techsupportapac@hypertherm.com (Technical Service)

Hypertherm Pty Limited
GPO Box 4836
Sydney NSW 2001, Australia
61 7 3103 1695 Tel
61 7 3219 9010 Fax
au.sales@hypertherm.com (Main Office)
techsupportapac@hypertherm.com (Technical Service)

Hypertherm (India) Thermal Cutting Pvt. Ltd
A-18 / B-1 Extension,
Mohan Co-Operative Industrial Estate,
Mathura Road, New Delhi 110044, India
91-11-40521201/ 2/ 3 Tel
91-11 40521204 Fax
htindia.info@hypertherm.com (Main Office)
technicalservice.emeia@hypertherm.com (Technical Service)

For training and education resources, go to the Hypertherm Cutting Institute (HCI) online at www.hypertherm.com/hci.

ENGLISH

WARNING! Before operating any Hypertherm equipment, read the safety instructions in your product's manual, the *Safety and Compliance Manual* (80669C), *Waterjet Safety and Compliance Manual* (80943C), and *Radio Frequency Warning Manual* (80945C). Failure to follow safety instructions can result in personal injury or in damage to equipment.

Copies of the manuals can come with the product in electronic and printed formats. Electronic copies are also on our website. Many manuals are available in multiple languages at www.hypertherm.com/docs.

BG (БЪЛГАРСКИ/BULGARIAN)

ПРЕДУПРЕЖДЕНИЕ! Преди да работите с което и да е оборудване Hypertherm, прочетете инструкциите за безопасност в ръководството на вашия продукт, „Инструкция за безопасност и съответствие“ (80669C), „Инструкция за безопасност и съответствие на Waterjet“ (80943C) и „Инструкция за предупреждение за радиочестота“ (80945C).

Продуктът може да е съпроводен от копия на ръководствата в електронен и в печатен формат. Тези в електронен формат са достъпни също на уебсайта ни. Много ръководства са налице на няколко езика на адрес www.hypertherm.com/docs.

CS (ČESKY/CZECH)

VAROVÁNÍ! Před uvedením jakéhokoli zařízení Hypertherm do provozu si přečtěte bezpečnostní pokyny v příručce k produktu a v *Manuálu pro bezpečnost a dodržování předpisů* (80669C), *Manuálu pro bezpečnost a dodržování předpisů při řezání vodním paprskem* (80943C) a *Manuálu varování ohledně rádiových frekvencí* (80945C).

Kopie příruček mohou být součástí dodávky produktu, a to v elektronické i tištěné formě. Elektronické kopie jsou k dispozici i na našich webových stránkách. Mnoho příruček je k dispozici v různých jazycích na stránce www.hypertherm.com/docs.

DA (DANSK/DANISH)

ADVARSEL! Inden Hypertherm udstyr tages i brug skal sikkerhedsinstruktionerne i produktets manual og i *Manual om sikkerhed og overholdelse af krav* (80669C), *Manual om sikkerhed og overholdelse af krav for vandstråleskæring* (80943C), og *Manual om radiofrekvensadvarsel* (80945C), gennemlæses.

Kopier af manualerne kan leveres med produktet i elektronisk og trykt format. Elektroniske kopier findes også på vores hjemmeside. Mange manualer er tilgængelige på flere sprog på www.hypertherm.com/docs.

DE (DEUTSCH/GERMAN)

WARNUNG! Bevor Sie ein Hypertherm-Gerät in Betrieb nehmen, lesen Sie bitte die Sicherheitsanweisungen in Ihrer Bedienungsanleitung, das *Handbuch für Sicherheit und Übereinstimmung* (80669C), das *Handbuch für Sicherheit und Compliance bei Wasserstrahl-Schneidanlagen* (80943C) und das *Handbuch für Hochfrequenz-Warnung* (80945C).

Bedienungsanleitungen und Handbücher können dem Gerät in elektronischer Form oder als Druckversion beiliegen. In elektronischer Form liegen sie auch auf unserer Website vor. Viele Handbücher stehen in verschiedenen Sprachen auf www.hypertherm.com/docs zur Verfügung.

ES (ESPAÑOL/SPANISH)

¡ADVERTENCIA! Antes de operar cualquier equipo Hypertherm, lea las instrucciones de seguridad del manual de su producto, del *Manual de seguridad y cumplimiento* (80669C), del *Manual de seguridad y cumplimiento en corte con chorro de agua* (80943C) y del *Manual de advertencias de radiofrecuencia* (80945C).

El producto puede incluir copias de los manuales en formato digital e impreso. Las copias digitales también están en nuestra página web. Hay diversos manuales disponibles en varios idiomas en www.hypertherm.com/docs.

ET (EESTI/ESTONIAN)

HOIATUS! Enne Hyperthermi mis tahes seadme kasutamist lugege läbi toote kasutusjuhendis olevad ohutusjuhised ning *Ohutus- ja vastavusjuhend* (80669C), *Veejoa ohutuse ja vastavuse juhend* (80943C) ja *Raadiosageduse hoiatusjuhend* (80945C). Ohutusjuhiste eiramine võib põhjustada vigastusi ja kahjustada seadmeid.

Juhiste koopiad võivad tootega kaasas olla elektrooniliselt või trükituna. Elektroonilised koopiad on saadaval ka meie veebilehel. Paljud kasutusjuhendid on erinevates keeltes saadaval veebilehel www.hypertherm.com/docs.

FI (SUOMI/FINNISH)

VAROITUS! Ennen minkään Hypertherm-laitteen käyttöä lue tuotteen käyttöoppaassa olevat turvallisuusohjeet, *turvallisuuden ja vaatimustenmukaisuuden käsikirja* (80669C), vesileikkauksen *turvallisuuden ja vaatimustenmukaisuuden käsikirja* (80943C) ja *radiotaajuusvaroitusten käsikirja* (80945C).

Käyttöoppaiden kopiot voivat olla tuotteen mukana sähköisessä ja tulostetussa muodossa. Sähköiset kopiot ovat myös verkkosivustollamme. Monet käyttöoppaat ovat myös saatavissa useilla kielillä www.hypertherm.com/docs.

FR (FRANÇAIS/FRENCH)

AVERTISSEMENT! Avant d'utiliser tout équipement Hypertherm, lire les consignes de sécurité du manuel de votre produit, du *Manuel de sécurité et de conformité* (80669C), du *Manuel de sécurité et de conformité du jet d'eau* (80943C) et du *Manuel d'avertissement relatif aux radiofréqunces* (80945C).

Les exemplaires des manuels qui accompagnent le produit peuvent être sous forme électronique ou papier. Les manuels sous forme électronique se trouvent également sur notre site Internet. Plusieurs manuels sont offerts en plusieurs langues à www.hypertherm.com/docs.

GR (ΕΛΛΗΝΙΚΆ/GREEK)

ΠΡΟΕΙΔΟΠΟΙΗΣΗ! Πριν θέσετε σε λειτουργία οποιονδήποτε εξοπλισμό της Hypertherm, διαβάστε τις οδηγίες ασφαλείας στο εγχειρίδιο του προϊόντος και στο *εγχειρίδιο ασφάλειας και συμμόρφωσης* (80669C), στο *εγχειρίδιο ασφάλειας και συμμόρφωσης του waterjet* (80943C) και στο *εγχειρίδιο προειδοποιήσεων για τις ραδιοσυχνότητες* (80945C).

Το προϊόν μπορεί να συνοδεύεται από αντίγραφα των εγχειριδίων σε ηλεκτρονική και έντυπη μορφή. Τα ηλεκτρονικά αντίγραφα υπάρχουν επίσης στον ιστότοπό μας. Πολλά εγχειρίδια είναι διαθέσιμα σε διάφορες γλώσσες στο www.hypertherm.com/docs.

HU (MAGYAR/HUNGARIAN)

VIGYÁZAT! Mielőtt bármilyen Hypertherm berendezést üzemeltetne, olvassa el a biztonsági információkat a termék kézikönyvében, a *Biztonsági és szabálykövetési kézikönyvben* (80669C), a *Vízsugaras biztonsági és szabálykövetési kézikönyvben* (80943C) és a *Rádiófrekvenciás figyelmeztetéseket tartalmazó kézikönyvben* (80945C).

A termékhez a kézikönyv példányai elektronikus és nyomtatott formában is mellékelve lehetnek. Az elektronikus példányok webhelyünkön is megtalálhatók. Számos kézikönyv áll rendelkezésre több nyelven a www.hypertherm.com/docs weboldalon.

ID (BAHASA INDONESIA/INDONESIAN)

PERINGATAN! Sebelum mengoperasikan peralatan Hypertherm, bacalah petunjuk keselamatan dalam manual produk Anda, *Manual Keselamatan dan Kepatuhan* (80669C), *Manual Keselamatan dan Kepatuhan Jet Air* (80943C), dan *Manual Peringatan Frekuensi Radio* (80945C). Kegagalan mengikuti petunjuk keselamatan dapat menyebabkan cedera pribadi atau kerusakan pada peralatan.

Produk mungkin disertai salinan manual atau petunjuk dalam format elektronik maupun cetak. Salinan elektronik juga tersedia di situs web kami. Berbagai manual tersedia dalam beberapa bahasa di www.hypertherm.com/docs.

IT (ITALIANO/ITALIAN)

AVVERTENZA! Prima di usare un'attrezzatura Hypertherm, leggere le istruzioni sulla sicurezza nel manuale del prodotto, nel *Manuale sulla sicurezza e la conformità* (80669C), nel *Manuale sulla sicurezza e la conformità Waterjet* (80943C) e nel *Manuale di avvertenze sulla radiofrequenza* (80945C).

Copie del manuale possono accompagnare il prodotto in formato cartaceo o elettronico. Le copie elettroniche sono disponibili anche sul nostro sito web. Molti manuali sono disponibili in diverse lingue all'indirizzo www.hypertherm.com/docs.

JA (日本語/JAPANESE)

警告！Hypertherm 機器を操作する前に、この製品説明書にある安全情報、「安全とコンプライアンスマニュアル」(80669C)、「ウォータージェットの安全とコンプライアンス」(80943C)、「高周波警告」(80945C) をお読みください。

説明書のコピーは、電子フォーマット、または印刷物として製品に同梱されています。電子コピーは当社ウェブサイトにも掲載されています。説明書の多くは www.hypertherm.com/docs にて複数の言語でご用意しています。

KO (한국어/KOREAN)

경고! Hypertherm 장비를 사용하기 전에 제품 설명서와 안전 및 규정 준수 설명서(80669C), 워터젯 안전 및 규정 준수 설명서(80943C) 그리고 무선 주파수 경고 설명서(80945C)에 나와 있는 안전 지침을 읽으십시오.

전자 형식과 인쇄된 형식으로 설명서 사본이 제품과 함께 제공될 수 있습니다. 전자 사본도 Hypertherm 웹사이트에서 보실 수 있으며 설명서 사본은 www.hypertherm.com/docs 에서 여러 언어로 제공됩니다.

NE (NEDERLANDS/DUTCH)

WAARSCHUWING! Lees voordat u Hypertherm-apparatuur gebruikt de veiligheidsinstructies in de producthandleiding, in de *Veiligheids- en nalevingshandleiding* (80669C) in de *Veiligheids- en nalevingshandleiding voor waterstralen* (80943C) en in de *Waarschuwingshandleiding radiofrequentie* (80945C).

De handleidingen kunnen in elektronische en gedrukte vorm met het product worden meegeleverd. Elektronische versies zijn ook beschikbaar op onze website. Veel handleidingen zijn in meerdere talen beschikbaar via www.hypertherm.com/docs.

NO (NORSK/NORWEGIAN)

ADVARSEL! Før du bruker noe Hypertherm-utstyr, må du lese sikkerhetsinstruksjonene i produktets håndbok, *håndboken om sikkerhet og samsvar* (80669C), *håndboken om vannjet sikkerhet og samsvar* (80943C), og *håndboken om radiofrekvensadvarsler* (80945C).

Eksemplarer av håndbøkene kan følge med produktet i elektronisk og trykt form. Elektroniske eksemplarer finnes også på nettstedet vårt. Mange håndbøker er tilgjengelig i flere språk på www.hypertherm.com/docs.

PL (POLSKI/POLISH)

OSTRZEŻENIE! Przed rozpoczęciem obsługi jakiegokolwiek systemu firmy Hypertherm należy się zapoznać z instrukcjami bezpieczeństwa zamieszczonymi w podręczniku produktu, w *podręczniku bezpieczeństwa i zgodności* (80669C), *podręczniku bezpieczeństwa i zgodności systemów strumienia wody* (80943C) oraz *podręczniku z ostrzeżeniem o częstotliwości radiowej* (80945C).

Do produktu mogą być dołączone podręczniki użytkownika w formie elektronicznej i drukowanej. Kopie elektroniczne znajdują się również w naszej witrynie internetowej. Wiele podręczników jest dostępnych w różnych językach pod adresem www.hypertherm.com/docs.

PT (PORTUGUÊS/PORTUGUESE)

ADVERTÊNCIA! Antes de operar qualquer equipamento Hypertherm, leia as instruções de segurança no manual do seu produto, no *Manual de Segurança e de Conformidade* (80669C), no *Manual de Segurança e de Conformidade do Waterjet* (80943C) e no *Manual de Advertência de radiofrequência* (80945C).

Cópias dos manuais podem vir com o produto nos formatos eletrônico e impresso. Cópias eletrônicas também são encontradas em nosso website. Muitos manuais estão disponíveis em vários idiomas em www.hypertherm.com/docs.

RO (ROMÂNĂ/ROMANIAN)

AVERTIZARE! Înainte de utilizarea oricărui echipament Hypertherm, citiți instrucțiunile de siguranță din manualul produsului, *manualul de siguranță și conformitate* (80669C), *manualul de siguranță și conformitate Waterjet* (80943C) și din *manualul de avertizare privind radiofrecvența* (80945C).

Produsul poate fi însoțit de copii ale manualelor în format tipărit și electronic. Exemplarele electronice sunt disponibile și pe site-ul nostru web. Numeroase manuale sunt disponibile în mai mult limbi la adresa: www.hypertherm.com/docs.

RU (РУССКИЙ/RUSSIAN)

БЕРЕГИСЬ! Перед работой с любым оборудованием Hypertherm ознакомьтесь с инструкциями по безопасности, представленными в руководстве, которое поставляется вместе с продуктом, в *Руководстве по безопасности и соответствию* (80669C), в *Руководстве по безопасности и соответствию для водоструйной резки* (80943C) и *Руководстве по предупреждению о радиочастотном излучении* (80945C).

Копии руководств, которые поставляются вместе с продуктом, могут быть представлены в электронном и бумажном виде. Электронные копии также доступны на нашем веб-сайте. Целый ряд руководств доступны на нескольких языках по ссылке www.hypertherm.com/docs.

SK (SLOVENČINA/SLOVAK)

VÝSTRAHA! Pred použitím akéhokoľvek zariadenia od spoločnosti Hypertherm si prečítajte bezpečnostné pokyny v návode na obsluhu vášho zariadenia a v *Manuáli o bezpečnosti a súlade s normami* (80669C), *Manuáli o bezpečnosti a súlade s normami pre systém rezania vodou* (80943C) a v *Manuáli s informáciami o rádiofrekvencii* (80945C).

Návod na obsluhu sa dodáva spolu s produktom v elektronickej a tlačenej podobe. Jeho elektronický formát je dostupný aj na našej webovej stránke. Mnohé z návodov na obsluhu sú dostupné vo viacjazyčnej mutácii na stránke www.hypertherm.com/docs.

SL (SLOVENŠČINA/SLOVENIAN)

OPOZORILO! Pred uporabo katerekoli Hyperthermove opreme preberite varnostna navodila v priročniku vašega izdelka, v *Priročniku za varnost in skladnost* (80669C), v *Priročniku za varnost in skladnost sistemov rezanja z vodnim curkom* (80943C) in v *Priročniku Opozorilo o radijskih frekvencah* (80945C).

Izvodi priročnikov so lahko izdelku priloženi v elektronski in tiskani obliki. Elektronski izvodi so na voljo tudi na našem spletnem mestu. Številni priročniki so na voljo v različnih jezikih na naslovu www.hypertherm.com/docs.

SR (SRPSKI/SERBIAN)

UPOZORENJE! Pre rukovanja bilo kojom Hyperthermovom opremom pročitajte uputstva o bezbednosti u svom priručniku za proizvod, *Priručniku o bezbednosti i usaglašenosti* (80669C), *Priručniku o bezbednosti i usaglašenosti Waterjet tehnologije* (80943C) i *Priručniku sa upozorenjem o radio-frekvenciji* (80945C).

Уз производ се испоручују копије приручника у електронском или штампаном формату. Електронске копије су такође доступне на нашем веб-сајту. Многи приручници су доступни на више језика на адреси www.hypertherm.com/docs.

SV (SVENSKA/SWEDISH)

VARNING! Läs häftet säkerhetsinformationen i din produkts *säkerhets- och efterlevnadsmanual* (80669C), *säkerhets- och efterlevnadsmanualen för Waterjet* (80943C) och *varningsmanualen för radiofrekvenser* (80945C) för viktig säkerhetsinformation innan du använder eller underhåller Hypertherm-utrustning.

Kopior av manualerna kan medfölja produkten i elektroniskt och tryckt format. Elektroniska kopior finns också på vår webbplats. Många manualer finns på flera språk på www.hypertherm.com/docs.

TH (ภาษาไทย/THAI)

คำเตือน! ก่อนการใช้งานอุปกรณ์ของ Hypertherm ทั้งหมด โปรดอ่านคำแนะนำด้านความปลอดภัยในคู่มือการใช้สินค้า คู่มือด้านความปลอดภัยและการปฏิบัติตาม (80669C), คู่มือด้านความปลอดภัยและการปฏิบัติตามสำหรับการใช้หัวตัดระบบวอเตอร์เจ็ต (80943C) และ คู่มือคำเตือนเกี่ยวกับความถี่วิทยุ (80945C) การไม่ปฏิบัติตามคำแนะนำด้านความปลอดภัยอาจส่งผลให้เกิดการบาดเจ็บหรือเกิดความเสียหายต่ออุปกรณ์

สำเนาคู่มือทั้งในรูปแบบอิเล็กทรอนิกส์และแบบสิ่งพิมพ์จะถูกแนบมาพร้อมกับผลิตภัณฑ์ สำเนาคู่มือในรูปแบบอิเล็กทรอนิกส์ของผลิตภัณฑ์และสำเนาคู่มือต่าง ๆ ในหลากหลายภาษานั้นยังมีให้บริการบนเว็บไซต์ www.hypertherm.com/docs ของเราอีกด้วย

TR (TÜRKÇE/TURKISH)

UYARI! Bir Hypertherm ekipmanını çalıştırmadan önce, ürününüzün kullanım kılavuzunda, *Güvenlik ve Uyumluluk Kılavuzu'nda* (80669C), *Su Jeti Güvenlik ve Uyumluluk Kılavuzu'nda* (80943C) ve *Radyo Frekansı Uyarısı Kılavuzu'nda* (80945C) yer alan güvenlik talimatlarını okuyun.

Kılavuzların kopyaları, elektronik ve basılı formatta ürünle birlikte verilebilir. Elektronik kopyalar web sitemizde de yer alır. Kılavuzların birçoğu www.hypertherm.com/docs adresinde birçok dilde mevcuttur.

VI (TIẾNG VIỆT/VIETNAMESE)

CẢNH BÁO! Trước khi vận hành bất kỳ thiết bị Hypertherm nào, hãy đọc các hướng dẫn an toàn trong hướng dẫn sử dụng sản phẩm của bạn, *Sổ tay An toàn và Tuân thủ* (80669C), *Sổ tay An toàn và Tuân thủ Tia nước* (80943C), và *Hướng dẫn Cảnh báo Tần số Vô tuyến* (80945C). Không tuân thủ các hướng dẫn an toàn có thể dẫn đến thương tích cá nhân hoặc hư hỏng thiết bị.

Bản sao của sổ tay có thể đi kèm với sản phẩm ở định dạng điện tử và in. Bản điện tử cũng có trên trang web của chúng tôi. Nhiều sổ tay có sẵn bằng nhiều ngôn ngữ tại www.hypertherm.com/docs.

ZH-CN (简 体中文/CHINESE SIMPLIFIED)

警告！ 在操作任何海宝设备之前，请阅读产品手册、《安全和法规遵守手册》(80669C)、《水射流安全和法规遵守手册》 (80943C) 以及 《射频警告手册》(80945C) 中的安全操作说明。

随产品提供的手册可提供电子版和印刷版两种格式。电子版本同时也在我们的网站上提供。很多手册有多种语言版本，详见 www.hypertherm.com/docs.

ZH-TW (繁 體中文/CHINESE TRADITIONAL)

警告！在操作任何 Hypertherm 設備前，請先閱讀您產品手冊內的安全指示，包括 《安全和法規遵從手冊》(80669C) 、《水刀安全和法規遵從手冊》（80943C），以及 《無線電頻率警示訊號手冊》（80945C）。

電子版和印刷版手冊複本可能隨產品附上。您也可以前往我們的網站下載電子版手冊。我們的網站上還以多種語言形式提供多種手冊，請造訪 www.hypertherm.com/docs。

Contents

Electromagnetic Compatibility (EMC) 13

Warranty 15

1 Where to Find Information 17

2 Install and Set Up the Plasma Power Supply 19

Make sure that you have all the system components 20
What to do if components are missing or damaged 21
System configurations 21
Hypertherm plasma power supply ratings 22
Powermax65 SYNC 22
Powermax85 SYNC 24
Powermax105 SYNC 26
Find system specifications on the data plate 28
Find the part number for your system 29
Critical raw materials 29
Symbols and marks 30
IEC symbols 31
Acoustical noise levels 32
Radio frequency identification (RFID) specifications 32

Cutting specifications 33
Recommended cut capacity – hand cutting 33
Recommended pierce capacity 33
Maximum cut speeds (mild steel) 33
Gouge capacity 34
Set up the plasma power supply 34
Plasma power supply dimensions and weights 36
Powermax65 SYNC and Powermax85 SYNC 36
Powermax105 SYNC 37
Work lead weights 37
Connect to electrical power 38
Install a line-disconnect switch 38
Requirements for grounding 40
Rated output (cutting power) of the plasma power supply 40
Voltage configurations 40
Powermax65 SYNC 41
Powermax85 SYNC 42
Powermax105 SYNC 43
Prepare the power cord and plug 44
Install the power plug 44
Install the power cord (if necessary) 44
Install a 1-phase power cord (CSA systems only) (if necessary) 46
Use an extension cord (if necessary) 46
Powermax65 SYNC systems 47
Powermax85 SYNC systems 48
Powermax105 SYNC systems 49
Use a generator (if necessary) 50
Powermax65 SYNC and Powermax85 SYNC systems 51
Powermax105 SYNC systems 52
Connect the gas supply 53
Gas supply source 54
High-pressure gas cylinders 55
Inlet gas pressure requirements (while gas is flowing) 57
Maximum inlet pressure 57
Optimum inlet pressure 57
Minimum inlet pressure 57
Cutting 58
Maximum Control gouging 58
Maximum Removal gouging 58
Recommended gas inlet flow rates 58
Add additional gas filtration (if necessary) 59

3 Operate the Plasma System 61

Make sure that the plasma power supply is connected to gas and power 61
Step 1 – Connect the torch lead 62
Step 2 – Connect the work lead and work clamp 63
Work lead 63
Work clamp 64
Step 3 – Install the cartridge 64
Lock the torch 65
Install the cartridge 66
Step 4 – Set the power switch to ON (I) 67
Step 5 – Unlock the SmartSYNC torch 68
Warning puffs of air (hand torches) 68
Fault code and LED behavior 69
Step 6 – Adjust the output current (A) and operating mode if necessary 70
Step 7 – Use the SmartSYNC torch 71
Use the hand torch 71
Adjust the amperage from the hand torch 71
Amperage settings by plasma power supply and cartridge 72
Use the machine torch 73
What occurs during and after cutting 73
Temperature control 73
Hand torch LED behavior 73
Adjust the gas pressure manually 74
Go back to automatic gas pressure mode 75
Adjust the operating mode manually 75
Cut expanded metal 76
Go back to automatic setting of the operating mode 76
Monitor cartridge data 77
Monitor data for individual cartridges 77
Show cartridge data on the status screen 78
When to replace the cartridge (fault code 0-32-*n*) 80
Conditions when cartridge end-of-life detection is disabled 81
Prevent overheating 81
Decrease arc stretch 82
Adjust brightness and contrast 83
Controls and indicators on the plasma power supply 84
Cutting controls 84
Status screen 86
Gas pressure indicators 87
Fault codes and fault icons 87

Main menu screen ... 88
Cartridge and Power Supply Data submenu ... 89
System Information submenu ... 90
Service Information submenu ... 91
System Settings submenu ... 92

4 Cut with the Hand Torch ... 93
About the hand torch ... 94
Select the correct cutting cartridge ... 95
Prepare to fire the torch ... 96
Start a cut from the edge of the workpiece ... 98
Pierce a workpiece ... 100
Use a FlushCut specialty cartridge ... 102
Guidelines for hand torch cutting ... 105
Get the most out of your cartridges ... 106
Signs that a cartridge is near end-of-life ... 107
Hand torch components, dimensions, and weights ... 108
Components ... 108
Dimensions ... 109
75° torch ... 109
15° torch ... 109
Drag cut cartridge ... 110
FineCut cartridge ... 110
Weights ... 110

5 Gouge with the Hand Torch ... 111
Select the correct gouging cartridge ... 111
Gouge with the hand torch ... 112
Change the gouge contour ... 114

6 Troubleshoot Common Problems ... 117
Start here: troubleshooting checklist ... 118
Common problems ... 123
Cold restarts and quick restarts ... 125
Do a cold restart ... 125
Do a quick restart ... 125
Examine the gas pressure ... 126
Examine the gas quality ... 127
Common cutting and gouging problems ... 128
Hand cutting problems ... 128
Hand gouging problems ... 130

Fault codes 132
Identify fault icons 133
Remove fault code conditions 134
Operational faults (0-*nn-n*) 134
Internal component faults (1-*nn-n*, 2-*nn-n*, 3-*nn-n*) 147
Troubleshoot power-related problems with generators 148
Troubleshoot 0-30-0 fault codes that occur during postflow 149
See recent fault codes (Power Supply Log screen) 150
Do a gas test 151
Start and stop a gas test in automatic gas pressure mode 151
Do a gas test in manual gas pressure mode 152
Adjust system settings on the Feature Configuration screen 153
Smart mode versus basic mode 155
Smart mode 155
Basic mode 156
Set system settings to factory default 156
See system information 158
Cartridge Data screen 160
Power Supply Data screen 162
Cartridge History screen 164
LCD/Control PCB Information screen 165
DSP PCB and Power PCB Information screen 166
Torch PCB Information screen 167
Radio Frequency (RF) Data screen 168
Cut Counters Transfer screen 169
CNC Interface Settings screen 170

7 Complete Regular Maintenance Tasks 171

Examine the plasma power supply and torch 171
Every use 173
Every cartridge change or weekly (whichever is more frequent) 174
Every 3 months 175
Cartridge maintenance 176
Examine the air filter bowl and filter element 177
Drain water from the bowl (if necessary) 177
Remove the air filter bowl and filter element 177
Examine the air filter bowl and O-ring 178
Examine the filter element 179
Replace the air filter bowl, O-ring, and filter element 179
Install the air filter bowl and filter element 180

Introduction

Hypertherm's CE-marked equipment is built in compliance with standard EN60974-10. The equipment should be installed and used in accordance with the information below to achieve electromagnetic compatibility.

The limits required by EN60974-10 may not be adequate to completely eliminate interference when the affected equipment is in close proximity or has a high degree of sensitivity. In such cases it may be necessary to use other measures to further reduce interference.

This cutting equipment is designed for use only in an industrial environment.

Installation and use

The user is responsible for installing and using the plasma equipment according to the manufacturer's instructions.

If electromagnetic disturbances are detected then it shall be the responsibility of the user to resolve the situation with the technical assistance of the manufacturer. In some cases this remedial action may be as simple as earthing the cutting circuit, see *Earthing of the workpiece*. In other cases, it could involve constructing an electromagnetic screen enclosing the power source and the work complete with associated input filters. In all cases, electromagnetic disturbances must be reduced to the point where they are no longer troublesome.

Assessment of area

Before installing the equipment, the user shall make an assessment of potential electromagnetic problems in the surrounding area. The following shall be taken into account:

- **a.** Other supply cables, control cables, signaling and telephone cables; above, below and adjacent to the cutting equipment.
- **b.** Radio and television transmitters and receivers.
- **c.** Computer and other control equipment.
- **d.** Safety critical equipment, for example guarding of industrial equipment.
- **e.** Health of the people around, for example the use of pacemakers and hearing aids.
- **f.** Equipment used for calibration or measurement.
- **g.** Immunity of other equipment in the environment. User shall ensure that other equipment being used in the environment is compatible. This may require additional protection measures.
- **h.** Time of day that cutting or other activities are to be carried out.

The size of the surrounding area to be considered will depend on the structure of the building and other activities that are taking place. The surrounding area may extend beyond the boundaries of the premises.

Methods of reducing emissions

Mains supply

Cutting equipment must be connected to the mains supply according to the manufacturer's recommendations. If interference occurs, it may be necessary to take additional precautions such as filtering of the mains supply.

Consideration should be given to shielding the supply cable of permanently installed cutting equipment, in metallic conduit or equivalent. Shielding should be electrically continuous throughout its length. The shielding should be connected to the cutting mains supply so that good electrical contact is maintained between the conduit and the cutting power source enclosure.

Maintenance of cutting equipment

The cutting equipment must be routinely maintained according to the manufacturer's recommendations. All access and service doors and covers should be closed and properly fastened when the cutting equipment is in operation. The cutting equipment should not be modified in any way, except as set forth in and in accordance with the manufacturer's written instructions. For example, the spark gaps of arc striking and stabilizing devices should be adjusted and maintained according to the manufacturer's recommendations.

Cutting cables

The cutting cables should be kept as short as possible and should be positioned close together, running at or close to the floor level.

Equipotential bonding

Bonding of all metallic components in the cutting installation and adjacent to it should be considered.

However, metallic components bonded to the workpiece will increase the risk that the operator could receive a shock by touching these metallic components and the electrode (nozzle for laser heads) at the same time.

The operator should be insulated from all such bonded metallic components.

Earthing of the workpiece

Where the workpiece is not bonded to earth for electrical safety, nor connected to earth because of its size and position, for example, ship's hull or building steel work, a connection bonding the workpiece to earth may reduce emissions in some, but not all instances. Care should be taken to prevent the earthing of the workpiece increasing the risk of injury to users, or damage to other electrical equipment. Where necessary, the connection of the workpiece to earth should be made by a direct connection to the workpiece, but in some countries where direct connection is not permitted, the bonding should be achieved by suitable capacitances selected according to national regulations.

Note: The cutting circuit may or may not be earthed for safety reasons. Changing the earthing arrangements should only be authorized by a person who is competent to assess whether the changes will increase the risk of injury, for example, by allowing parallel cutting current return paths which may damage the earth circuits of other equipment.
Further guidance is provided in IEC 60974-9, Arc Welding Equipment, Part 9: Installation and Use.

Screening and shielding

Selective screening and shielding of other cables and equipment in the surrounding area may alleviate problems of interference. Screening of the entire plasma cutting installation may be considered for special applications.

Attention

Genuine Hypertherm parts are the factory-recommended replacement parts for your Hypertherm system. Any damage or injury caused by the use of other than genuine Hypertherm parts may not be covered by the Hypertherm warranty, and will constitute misuse of the Hypertherm Product.

You are solely responsible for the safe use of the Product. Hypertherm does not and cannot make any guarantee or warranty regarding the safe use of the product in your environment.

General

Hypertherm, Inc. warrants that its Products shall be free from defects in materials and workmanship for the specific periods of time set forth herein and as follows: if Hypertherm is notified of a defect (i) with respect to the plasma power supply within a period of two (2) years from the date of its delivery to you, with the exception of Powermax brand power supplies, which shall be within a period of three (3) years from the date of delivery to you, and (ii) with respect to the torch and leads within a period of one (1) year from its date of delivery to you, with the exception of the HPRXD short torch with integrated lead, which shall be within a period of six (6) months from the date of delivery to you, and with respect to torch lifter assemblies within a period of one (1) year from its date of delivery to you, and with respect to Automation products one (1) year from its date of delivery to you, with the exception of the EDGE Connect CNC, EDGE Connect T CNC, EDGE Connect TC CNC, EDGE Pro CNC, EDGE Pro Ti CNC, MicroEDGE Pro CNC, and ArcGlide THC, which shall be within a period of two (2) years from the date of delivery to you, and (iii) with respect to HyIntensity fiber laser components within a period of two (2) years from the date of its delivery to you, with the exception of laser heads and beam delivery cables, which shall be within a period of one (1) year from its date of delivery to you.

All third-party engines, engine accessories, alternators, and alternator accessories are covered by the respective manufacturers' warranties and not covered by this warranty.

This warranty shall not apply to any Powermax brand power supplies that have been used with phase converters. In addition, Hypertherm does not warranty systems that have been damaged as a result of poor power quality, whether from phase converters or incoming line power. This warranty shall not apply to any product which has been incorrectly installed, modified, or otherwise damaged.

Hypertherm provides repair, replacement or adjustment of the Product as the sole and exclusive remedy, if and only if the warranty set forth herein properly is invoked and applies. Hypertherm, at its sole option, shall repair, replace, or adjust, free of charge, any defective Products covered by this warranty which shall be returned with Hypertherm's prior authorization (which shall not be unreasonably withheld), properly packed, to Hypertherm's place of business in Hanover, New Hampshire, or to an authorized Hypertherm repair facility, all costs, insurance and freight pre paid by the customer. Hypertherm shall not be liable for any repairs, replacement, or adjustments of Products covered by this warranty, except those made pursuant to this paragraph and with Hypertherm's prior written consent.

The warranty set forth above is exclusive and is in lieu of all other warranties, express, implied, statutory, or otherwise with respect to the Products or as to the results which may be obtained therefrom, and all implied warranties or conditions of quality or of merchantability or fitness for a particular purpose or against infringement. The foregoing shall constitute the sole and exclusive remedy for any breach by Hypertherm of its warranty.

Distributors/OEMs may offer different or additional warranties, but Distributors/OEMs are not authorized to give any additional warranty protection to you or make any representation to you purporting to be binding upon Hypertherm.

Patent indemnity

Except only in cases of products not manufactured by Hypertherm or manufactured by a person other than Hypertherm not in strict conformity with Hypertherm's specifications and in cases of designs, processes, formulae, or combinations not developed or purported to be developed by Hypertherm, Hypertherm will have the right to defend or settle, at its own expense, any suit or proceeding brought against you alleging that the use of the Hypertherm product, alone and not in combination with any other product not supplied by Hypertherm, infringes any patent of any third party. You shall notify Hypertherm promptly upon learning of any action or threatened action in connection with any such alleged infringement (and in any event no longer than fourteen (14) days after learning of any action or threat of action), and Hypertherm's obligation to defend shall be conditioned upon Hypertherm's sole control of, and the indemnified party's cooperation and assistance in, the defense of the claim.

Limitation of liability

In no event shall Hypertherm be liable to any person or entity for any incidental, consequential direct, indirect, punitive or exemplary damages (including but not limited to lost profits) regardless of whether such liability is based on breach of contract, tort, strict liability, breach of warranty, failure of essential purpose, or otherwise, and even if advised of the possibility of such damages. Hypertherm shall not be liable for any losses to Distributor based on down time, lost production or lost profits. It is the intention of the Distributor and Hypertherm that this provision be construed by a court as being the broadest limitation of liability consistent with applicable law.

National and local codes

National and local codes governing plumbing and electrical installation shall take precedence over any instructions contained in this manual. In no event shall Hypertherm be liable for injury to persons or property damage by reason of any code violation or poor work practices.

Liability cap

In no event shall Hypertherm's liability, if any, whether such liability is based on breach of contract, tort, strict liability, breach of warranties, failure of essential purpose or otherwise, for any claim, action, suit or proceeding (whether in court, arbitration, regulatory proceeding or otherwise) arising out of or relating to the use of the Products exceed in the aggregate the amount paid for the Products that gave rise to such claim.

Insurance

At all times you will have and maintain insurance in such quantities and types, and with coverage sufficient and appropriate to defend and to hold Hypertherm harmless in the event of any cause of action arising from the use of the products.

Transfer of rights

You may transfer any remaining rights you may have hereunder only in connection with the sale of all or substantially all of your assets or capital stock to a successor in interest who agrees to be bound by all of the terms and conditions of this Warranty. Within thirty (30) days before any such transfer occurs, you agree to notify in writing Hypertherm, which reserves the right of approval. Should you fail timely to notify Hypertherm and seek its approval as set forth herein, the Warranty set forth herein shall be null and void and you will have no further recourse against Hypertherm under the Warranty or otherwise.

Waterjet product warranty coverage

Product	Parts coverage
HyPrecision pumps	27 months from the ship date, or 24 months from the date of proven installation, or 4,000 hours, whichever occurs first
PowerDredge abrasive removal system	15 months from the ship date or 12 months from the date of proven installation, whichever occurs first
EcoSift abrasive recycling system	15 months from the ship date or 12 months from the date of proven installation, whichever occurs first
Abrasive metering devices	15 months from the ship date or 12 months from the date of proven installation, whichever occurs first
On/off valve air actuators	15 months from the ship date or 12 months from the date of proven installation, whichever occurs first
Diamond orifices	600 hours of use with the use of a thimble filter and compliance with Hypertherm's water quality requirements

Consumable parts are not covered by this warranty. Consumable parts include, but are not limited to, high-pressure water seals, check valves, cylinders, bleed-down valves, low-pressure seals, high-pressure tubing, low- and high-pressure water filters and abrasive collection bags. All third-party pumps, pump accessories, hoppers, hopper accessories, dryer boxes, dryer box accessories and plumbing accessories are covered by the respective manufacturers' warranties and not covered by this warranty.

1 Where to Find Information

This operator manual includes the following information for the Powermax65/85/105 SYNC plasma power supplies and SmartSYNC™ hand torches:

- Specifications, ratings, and installation and setup information
- Operating instructions for the plasma power supply and torch
- Instructions for cutting, piercing, and gouging
- Maintenance and troubleshooting information

For related information, refer to the following documents:

- *Safety and Compliance Manual* (80669C)
- *Powermax65/85/105 SYNC Cut Charts Guide* (810500MU)
- *Powermax65/85/105 SYNC Parts Guide* (810490)
- *Powermax65/85/105 SYNC Mechanized Cutting Guide* (810480)

You can find these documents on the USB memory stick that came with your plasma power supply. Technical documentation is also available at www.hypertherm.com/docs.

Technical documentation is current as of the date of its release. Subsequent revisions are possible. Refer to www.hypertherm.com/docs for the most recent revisions of released documents.

2 Install and Set Up the Plasma Power Supply

The Powermax65 SYNC, Powermax85 SYNC, and Powermax105 SYNC are portable plasma power supplies that you can use for many handheld and mechanized cutting and gouging applications.

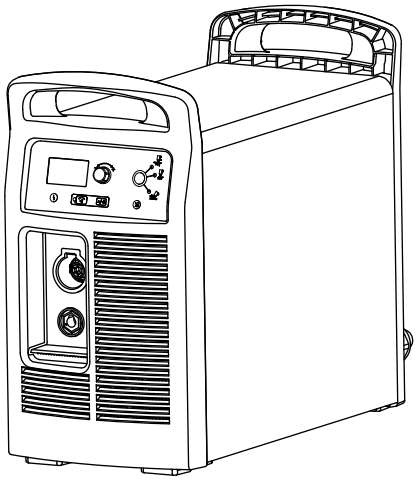

Powermax SYNC systems include the following capabilities:

- Use air or nitrogen to cut electrically conductive metals, such as mild steel, stainless steel, or aluminum
- Use F5 gas to cut stainless steel
- Gouge with 2 gouging processes: Maximum Removal and Maximum Control
- Adjust the output current (A) from the SmartSYNC hand torch
- Use a single-piece cartridge instead of a set of consumables
- Automatically set the operating mode, output current (A), and gas pressure related to the type of SmartSYNC torch and Hypertherm cartridge that you install
- Record cartridge information so that you can monitor cartridge life, and be notified when you need to install a new cartridge
- Lock the SmartSYNC torches without setting the plasma power supply to OFF
- Quickly change SmartSYNC torches with the FastConnect™ system (quick-disconnect)

Make sure that you have all the system components

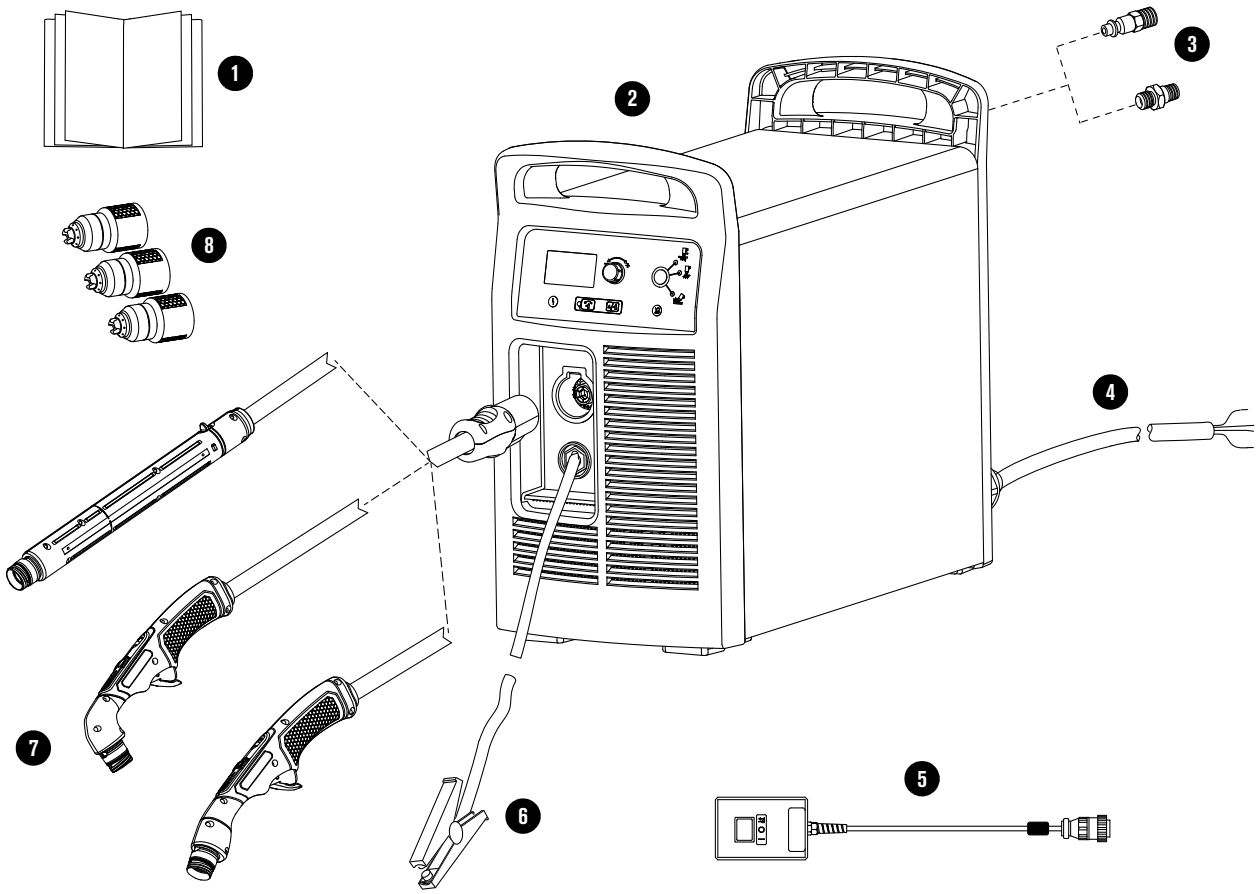

1 Documentation:
- USB memory stick with technical and safety documentation
- Quick Setup Guide
- Quick Reference Guide
- Cut Charts Guide
- Fault codes label

2 Plasma power supply

3 Region-specific gas inlet fitting

4 Power cord with no power plug

5 Remote-start pendant (optional – mechanized configurations only)

6 Work lead with work clamp, C clamp, or ring terminal

7 15° or 75° hand torch with lead or 180° full-length machine torch with lead

8 Starter set of cartridges

For a full list of the cutting and gouging cartridges available refer to the *Powermax65/85/105 SYNC Parts Guide* (810490).

What to do if components are missing or damaged

- **Claims for damage during shipment**
  - Send a claim to the carrier if your system was damaged during shipment.
  - Get the system's model number and serial number from the data plate on the rear of the plasma power supply. Refer to Find system specifications on the data plate on page 28 for a sample data plate.
  - Get a copy of the bill of lading from Hypertherm.
- **Claims for missing or damaged merchandise**
  - Speak to your Hypertherm distributor or authorized repair facility, or speak to the nearest Hypertherm office shown in the front of this manual.

System configurations

The Powermax65 SYNC, Powermax85 SYNC, and Powermax105 SYNC systems are universal plasma power supplies that automatically adjust to operate with various AC voltages. The following system configurations are available:

Model	Configurations	AC Voltages
Powermax65 SYNC *and* Powermax85 SYNC	200 V – 600 V CSA	200 V – 480 V (1-phase)
		200 V – 600 V (3-phase)
	380 V CCC / 400 V CE	380 V / 400 V (3-phase)
Powermax105 SYNC	200 V – 600 V CSA	200 V – 600 V (3-phase)
	230 V – 400 V CE	230 V – 400 V (3-phase)
	380 V CCC / 400 V CE	380 V / 400 V (3-phase)

NOTICE

Do not use phase converters to supply 3-phase power to your Powermax plasma power supply.

Hypertherm does not warranty systems that have been damaged as a result of poor power quality from phase converters or incoming line power.

Hypertherm plasma power supply ratings

Powermax65 SYNC

Rated open-circuit voltage (U_0)	
CSA, 1-phase, 3-phase	296 VDC CSA
CE/CCC, 3-phase	270 VDC CE/CCC
Output characteristic*	Drooping
Rated output current (I_2)	20 A – 65 A
Rated output voltage (U_2)	139 VDC
Duty cycle at 40°C (104°F)**	
CSA	50% at 65 A, 230 V – 600 V, 1-/3-phase 40% at 65 A, 200 V – 208 V, 1-/3-phase 100% at 46 A, 230 V – 600 V, 1-/3-phase
CE/CCC	50% at 65 A, 380 V/400 V, 3-phase 100% at 46 A, 380 V/400 V, 3-phase
Operating temperature	-10°C to 40°C (14°F to 104°F)
Storage temperature	-25°C to 55°C (-13°F to 131°F)
Power factor	
200 V – 480 V CSA, 1-phase	0.99 – 0.97
200 V – 600 V CSA, 3-phase	0.94 – 0.73
380 V CCC/400 V CE, 3-phase	0.94
Idle state power consumption (CE systems)	28 W
Power source efficiency at rated maximum output power (CE systems)	91.2%
R_{sce} – Short Circuit Ratio (CE/CCC systems only)	
U_1 – Volts AC rms, 3-phase	400 VAC
R_{sce}	296.4
EMC emissions classification CISPR 11 (CE/CCC systems only)***	Class A

Input voltage (U_1) / Input current (I_1) at rated output ($U_{2\ MAX}$ $I_{2\ MAX}$)

(Refer to Connect to electrical power on page 38)

CSA, 1-phase, 50 Hz/60 Hz	CSA, 3-phase, 50 Hz/60 Hz	CE/CCC†, ††, 3-phase, 50 Hz/60 Hz
200 V: 52 A	200 V: 32 A	380 V: 15.5 A
208 V: 50 A	208 V: 31 A	400 V: 15 A
240 V: 44 A	240 V: 27 A	
480 V: 22 A	480 V: 13 A	
	600 V: 13 A	

Gas type	Air	Nitrogen	F5†††
Gas quality	Clean, dry, oil-free per ISO 8573-1 Class 1.4.2 Refer to page 54.	99.95% pure	99.98% pure (F5 = 95% nitrogen [N_2], 5% hydrogen [H_2])
Recommended gas inlet flow rates			
Cutting		210 slpm (450 scfh, 7.5 scfm) at a minimum 5.9 bar (85 psi)	
Maximum Removal gouging		210 slpm (450 scfh, 7.5 scfm) at a minimum 4.8 bar (70 psi)	
Maximum Control gouging		210 slpm (450 scfh, 7.5 scfm) at a minimum 4.8 bar (70 psi)	

* Defined as a plot of output voltage versus output current.

** Refer to the data plate on the rear of the plasma power supply for more information on duty cycle and for IEC ratings.

*** WARNING: This Class A equipment is not intended for use in residential locations where the public low voltage supply system supplies the electrical power. There can be difficulties in delivering electromagnetic compatibility in those locations, because of conducted as well as radiated disturbances.

† Equipment complies with IEC 61000-3-12 if the short-circuit power S_{sc} is greater than or equal to 6,160 KVA at the interface point between the operator's supply and the public system. It is the responsibility of the installer or operator of the equipment to make sure, by consultation with the distribution network operator if necessary, that the equipment is connected only to a supply with a short-circuit power S_{sc} greater than or equal to 6,160 KVA.

†† Equipment complies with IEC 61000-3-11 if the supply impedance, Zmax, is 0.201 or less. It is the responsibility of the installer or operator of the equipment to make sure, by consultation with the distribution network operator if necessary, that the equipment is connected only to a supply with a impedance of 0.201 or less.

††† F5 recommended only for cutting stainless steel. Refer to *Cut stainless steel with F5* in the *Powermax65/85/105 SYNC Mechanized Cutting Guide* (810480).

Powermax85 SYNC

Rated open-circuit voltage (U_0)	
CSA, 1-phase, 3-phase	305 VDC CSA
CE/CCC, 3-phase	270 VDC CE/CCC
Output characteristic*	Drooping
Rated output current (I_2)	25 A – 85 A
Rated output voltage (U_2)	143 VDC
Duty cycle at 40°C (104°F)**	
CSA	60% at 85 A, 230 V – 600 V, 3-phase 60% at 85 A, 480 V, 1-phase 50% at 85 A, 240 V, 1-phase 50% at 85 A 200 V – 208 V, 3-phase 40% at 85 A 200 V – 208 V, 1-phase 100% at 66 A, 230 V – 600 V, 1-/3-phase
CE/CCC	60% at 85 A, 380 V/400 V, 3-phase 100% at 66 A, 380 V/400 V, 3-phase
Operating temperature	-10°C to 40°C (14°F to 104°F)
Storage temperature	-25°C to 55°C (-13°F to 131°F)
Power factor	
200 V – 480 V CSA, 1-phase	0.99 – 0.96
200 V – 600 V CSA, 3-phase	0.94 – 0.76
380 V CCC/400 V CE, 3-phase	0.94
Idle state power consumption (CE systems)	26 W
Power source efficiency at rated maximum output power (CE systems)	91.9%
R_{sce} – Short Circuit Ratio (CE/CCC systems only)	
U_1 – Volts AC rms, 3-phase	400 VAC
R_{sce}	209.4
EMC emissions classification CISPR 11 (CE/CCC systems only)***	Class A

Input voltage (U_1) / Input current (I_1) at rated output ($U_{2\ MAX}$ $I_{2\ MAX}$)

(Refer to Connect to electrical power on page 38.)

CSA, 1-phase, 50 Hz/60 Hz	CSA, 3-phase, 50 Hz/60 Hz	CE/CCC†, ††, 3-phase, 50 Hz/60 Hz
200 V: 70 A	200 V: 42 A	380 V: 20.5 A
208 V: 68 A	208 V: 40 A	400 V: 19.5 A
240 V: 58 A	240 V: 35 A	
480 V: 29 A	480 V: 18 A	
	600 V: 17 A	

Gas type	Air	Nitrogen	F5†††
Gas quality	Clean, dry, oil-free per ISO 8573-1 Class 1.4.2 Refer to page 54.	99.95% pure	99.98% pure (F5 = 95% nitrogen [N_2], 5% hydrogen [H_2])
Recommended gas inlet flow rates			
Cutting	210 slpm (450 scfh, 7.5 scfm) at a minimum 5.9 bar (85 psi)		
Maximum Removal gouging	210 slpm (450 scfh, 7.5 scfm) at a minimum 4.8 bar (70 psi)		
Maximum Control gouging	210 slpm (450 scfh, 7.5 scfm) at a minimum 4.8 bar (70 psi)		

* Defined as a plot of output voltage versus output current.

** Refer to the data plate on the rear of the plasma power supply for more information on duty cycle and for IEC ratings.

*** WARNING: This Class A equipment is not intended for use in residential locations where the public low voltage supply system supplies the electrical power. There can be difficulties in delivering electromagnetic compatibility in those locations, because of conducted as well as radiated disturbances.

† Equipment complies with IEC 61000-3-12 if the short-circuit power S_{sc} is greater than or equal to 4,353 KVA at the interface point between the operator's supply and the public system. It is the responsibility of the installer or operator of the equipment to make sure, by consultation with the distribution network operator if necessary, that the equipment is connected only to a supply with a short-circuit power S_{sc} greater than or equal to 4,353 KVA.

†† Equipment complies with IEC 61000-3-11 if the supply impedance, Zmax, is 0.201 or less. It is the responsibility of the installer or operator of the equipment to make sure, by consultation with the distribution network operator if necessary, that the equipment is connected only to a supply with a impedance of 0.201 or less.

††† F5 recommended only for cutting stainless steel. Refer to *Cut stainless steel with F5* in the *Powermax65/85/105 SYNC Mechanized Cutting Guide* (810480).

Powermax105 SYNC

Rated open-circuit voltage (U_0)	
200 V – 600 V CSA	300 VDC
230 V – 400 V CE	288 VDC
380 V CCC	286 VDC
400 V CE	286 VDC
Output characteristic*	Drooping
Rated output current (I_2)	30 A – 105 A
Rated output voltage (U_2)	160 VDC
Duty cycle at 40°C (104°F)**	
200 V – 600 V CSA	80% at 105 A, 480 V – 600 V, 3-phase 70% at 105 A 240 V, 3-phase 54% at 105 A 208 V, 3-phase 50% at 105 A, 200 V, 3-phase 100% at 94 A, 480 V – 600 V, 3-phase 100% at 88 A, 240 V, 3-phase 100% at 77 A, 208 V, 3-phase 100% at 74 A, 200 V, 3-phase
230 V – 400 V CE	80% at 105 A, 400 V, 3-phase 70% at 105 A, 230 V, 3-phase 100% at 94 A, 400 V, 3-phase 100% at 88 A, 230 V, 3-phase
380 V CCC	80% at 105 A, 380 V, 3-phase 100% at 94 A, 380 V, 3-phase
400 V CE	80% at 105 A, 400 V, 3-phase 100% at 94 A, 400 V, 3-phase
Operating temperature	-10°C to 40°C (14°F to 104°F)
Storage temperature	-25°C to 55°C (-13°F to 131°F)
Power factor	
200 V – 600 V CSA, 3-phase	0.94 – 0.77
230 V – 400 V CE, 3-phase	0.94 – 0.92
380 V CCC, 3-phase	0.94
400 V CE, 3-phase	0.94
Idle state power consumption (CE systems)	
230 V – 400 V CE	40 W
400 V CE	27 W

Power source efficiency at rated maximum output power (CE systems)			
230 V – 400 V CE	91.0%		
400 V CE	91.9%		
R_{sce} – Short Circuit Ratio (CE/CCC systems only)			
U_1 – Volts AC rms, 3-phase	230 V – 400 V	400 V	
R_{sce}	235.4	176.9	
EMC emissions classification CISPR 11 (CE/CCC systems only)* **		Class A	
Input voltage (U_1) / Input current (I_1) at rated output ($U_{2\ MAX}$ $I_{2\ MAX}$) (Refer to Connect to electrical power on page 38.)			
CSA, 3-phase, 50 Hz/60 Hz	CE†,††, 3-phase, 50 Hz/60 Hz	CE††, †††/CCC, 3-phase, 50 Hz/60 Hz	
200 V: 58 A 208 V: 56 A 240 V: 49 A 480 V: 25 A 600 V: 22 A	230 V: 50 A 400 V: 29 A	380 V: 30 A 400 V: 28 A	
Gas type	Air	Nitrogen	F5‡
Gas quality	Clean, dry, oil-free per ISO 8573-1 Class 1.4.2 Refer to page 54.	99.95% pure	99.98% pure (F5 = 95% nitrogen [N_2], 5% hydrogen [H_2])
Recommended gas inlet flow rates			
Cutting	260 slpm (550 scfh, 9.1 scfm) at a minimum 6.2 bar (90 psi)		
Maximum Removal gouging	260 slpm (550 scfh, 9.1 scfm) at a minimum 4.8 bar (70 psi)		
Maximum Control gouging	260 slpm (550 scfh, 9.1 scfm) at a minimum 4.8 bar (70 psi)		

* Defined as a plot of output voltage versus output current.

** Refer to the data plate on the rear of the plasma power supply for more information on duty cycle and for IEC ratings.

*** WARNING: This Class A equipment is not intended for use in residential locations where the public low voltage supply system supplies the electrical power. There can be difficulties in delivering electromagnetic compatibility in those locations, because of conducted as well as radiated disturbances.

† Equipment complies with IEC 61000-3-12 if the short-circuit power S_{sc} is greater than or equal to 4,730 KVA at the interface point between the operator's supply and the public system. It is the responsibility of the installer or operator of the equipment to make sure, by consultation with the distribution network operator if necessary, that the equipment is connected only to a supply with a short-circuit power S_{sc} greater than or equal to 4,730 KVA.

†† This product complies with the technical requirements of IEC 61000-3-3 and is not subject to conditional connection.

††† Equipment complies with IEC 61000-3-12 if the short-circuit power S_{sc} is greater than or equal to 2,114 KVA at the interface point between the operator's supply and the public system. It is the responsibility of the installer or operator of the equipment to make sure, by consultation with the distribution network operator if necessary, that the equipment is connected only to a supply with a short-circuit power S_{sc} greater than or equal to 2,114 KVA.

‡ F5 recommended only for cutting stainless steel. Refer to *Cut stainless steel with F5* in the *Powermax65/85/105 SYNC Mechanized Cutting Guide* (810480).

Find system specifications on the data plate

The data plate on the rear of the plasma power supply contains 2 sets of ratings:

- The **HYP** ratings are Hypertherm plasma power supply ratings. They show the capability of the system related to Hypertherm's internal testing.
- The **IEC** ratings are the minimum ratings that the system must get to meet the requirements of IEC standard 60974-1.

CSA, CE, and CCC data plates differ slightly.

Sample CSA data plate

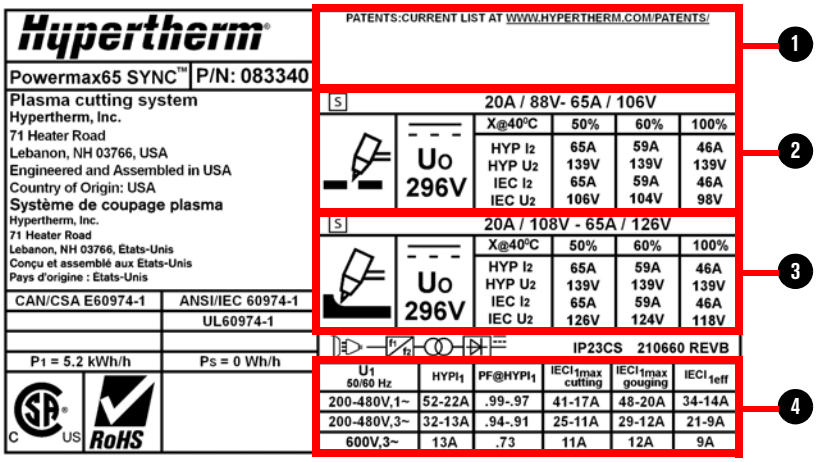

Sample CE/CCC data plate

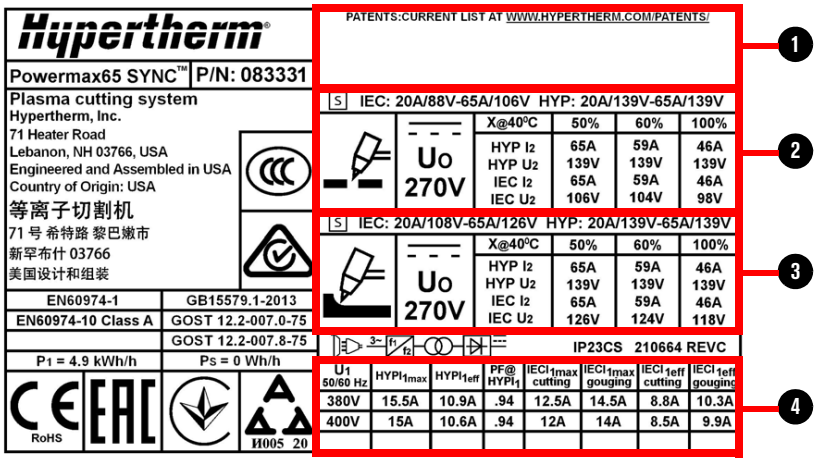

1 Serial number, bar code, and date made

2 Plasma cutting ratings

3 Plasma gouging ratings

4 Plasma power supply ratings

HYP = Hypertherm internal rating

IEC = International Electrotechnical Commission rating

I_1 = Input current (A)

I_2 = Conventional welding current (A)

PF = Power factor

U0 = Rated no load voltage (V)

U1 = Input voltage (V)

U2 = Conventional welding voltage (V)

X = Duty cycle (%)

Find the part number for your system

The part number for your plasma power supply is near the top of the data plate.

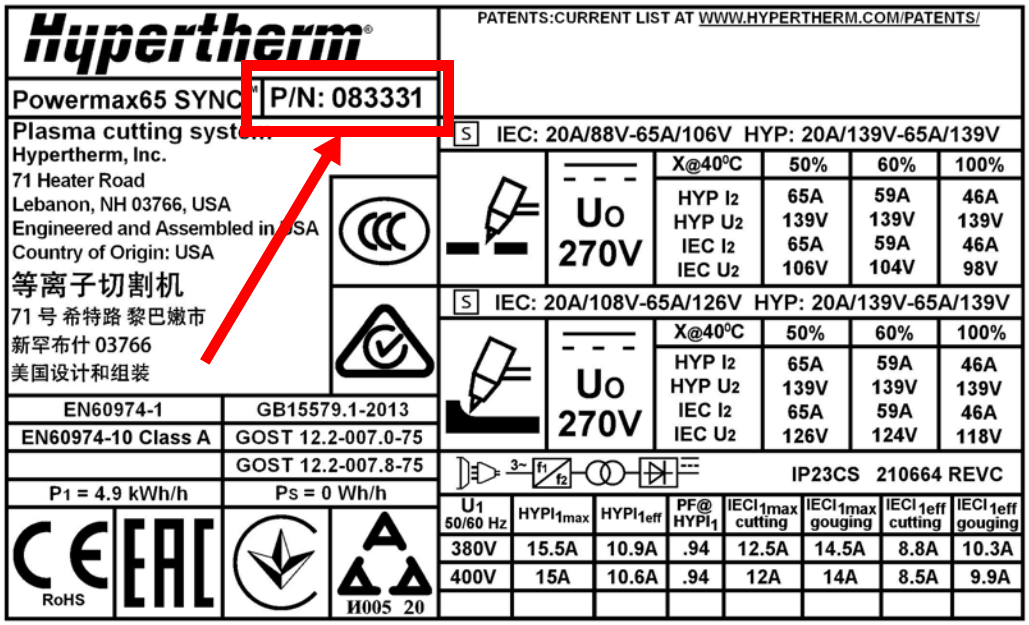

Critical raw materials

Critical raw material	Components that contain more than 1 gram
Antimony	Torch leads
Bauxite	Heatsinks, metal covers
Borate	All printed circuit boards
Magnesium	Heatsinks, metal covers
Silicon metal	Heatsinks, metal covers
Strontium	Fans

Symbols and marks

Your product may have one or more of the following marks on or near the data plate. Because of differences and conflicts in national regulations, not all marks are applied to every version of a product.

S mark

The S mark indicates that the power supply and torch are suitable for operations carried out in environments with increased hazard of electrical shock according to IEC 60974-1.

CSA mark

Products with a CSA mark meet the United States and Canadian regulations for product safety. The products were evaluated, tested, and certified by CSA-International. Alternatively, the product may have a mark by one of the other Nationally Recognized Testing Laboratories (NRTL) accredited in both the United States and Canada, such as UL or TÜV.

CE mark

The CE marking signifies the manufacturer's declaration of conformity to applicable European directives and standards. Only those versions of products with a CE marking located on or near the data plate comply with European Directives. Applicable directives may include the European Low Voltage Directive, the European Electromagnetic Compatibility (EMC) Directive, the Radio Equipment Directive (RED), and the Restriction of Hazardous Substances (RoHS) Directive. See the European CE Declaration of Conformity for details.

Eurasian Customs Union (CU) mark

CE versions of products that include an EAC mark of conformity meet the product safety and EMC requirements for export to Russia, Belarus, and Kazakhstan.

GOST-TR mark

CE versions of products that include a GOST-TR mark of conformity meet the product safety and EMC requirements for export to the Russian Federation.

RCM mark

CE versions of products with an RCM mark comply with the EMC and safety regulations required for sale in Australia and New Zealand.

CCC mark

The China Compulsory Certification (CCC) mark indicates that the product has been tested and found compliant with product safety regulations required for sale in China.

UkrSEPRO mark

The CE versions of products that include a UkrSEPRO mark of conformity meet the product safety and EMC requirements for export to the Ukraine.

Serbian AAA mark

CE versions of products that include a AAA Serbian mark meet the product safety and EMC requirements for export to Serbia.

RoHS mark

The RoHS mark indicates that the product meets the requirements of the European Restriction of Hazardous Substances (RoHS) Directive.

United Kingdom Conformity Assessed mark

CE versions of products that include a UKCA mark of conformity meet the product safety, EMC, RF, and RoHS requirements for export to the UK.

IEC symbols

The following symbols can appear on the data plate, control labels, switches, light-emitting diodes (LEDs), and liquid-crystal display (LCD) screen, if applicable.

Direct current (DC)

Alternating current (AC)

Plasma torch cutting

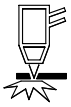
Plate metal cutting

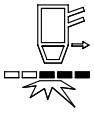
Expanded metal cutting

Gouging

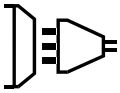
AC input power connection

The terminal for the external protective (earth) conductor

Power is ON

Power is OFF

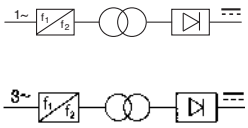

An inverter-based power source, either 1-phase or 3-phase

Volt/amperage curve, “drooping” characteristic

Acoustical noise levels

This plasma system can make more than the permitted acoustical noise levels as defined by national and local codes. Always put on correct ear protection when cutting or gouging. Any acoustical noise measurements taken are related to the specific environment in which the system is used. Refer to *Noise can damage hearing* in the *Safety and Compliance Manual* (80669C).

In addition, you can find an *Acoustical Noise Data Sheet* for your system at www.hypertherm.com/docs. In the search box, enter **data sheet**.

Radio frequency identification (RFID) specifications

The Hypertherm RFID near-field wireless communication system contains the following components:

- A passive RFID tag in the Hypertherm cartridge
- A wireless radio transceiver on the printed circuit board (PCB) in the SmartSYNC torch:
  - Operating frequency: 13.56 MHz
  - Protocol: ISO/IEC 15693
  - Maximum range: 8 mm (0.32 inch)
  - Maximum transmit power: 104 mW

Cutting specifications

Recommended cut capacity – hand cutting

	Material thickness		
Recommended capacity	**Powermax65 SYNC**	**Powermax85 SYNC**	**Powermax105 SYNC**
Cut capacity at 500 mm/min (20 in/min)*	19 mm (3/4 in.)	25 mm (1 in.)	32 mm (1-1/4 in.)
Cut capacity at 250 mm/min (10 in/min)*	25 mm (1 in.)	32 mm (1-1/4 in.)	38 mm (1-1/2 in.)
Severance capacity at 125 mm/min (5 in/min)*	32 mm (1-1/4 in.)	38 mm (1-1/2 in.)	51 mm (2 in.)

* Cut capacity speeds are not necessarily maximum speeds. They are the speeds that are required to be rated at that thickness.

Recommended pierce capacity

	Material thickness		
Pierce capacity	**Powermax65 SYNC**	**Powermax85 SYNC**	**Powermax105 SYNC**
For handheld cutting, or mechanized cutting with programmable torch height control	16 mm (5/8 in.)	19 mm (3/4 in.)	22 mm (7/8 in.)
For mechanized cutting without programmable torch height control	13 mm (1/2 in.)	16 mm (5/8 in.)	19 mm (3/4 in.)

Maximum cut speeds (mild steel)

	Maximum cut speed*		
Material thickness	**Powermax65 SYNC**	**Powermax85 SYNC**	**Powermax105 SYNC**
6 mm (1/4 in.)	3,683 mm/min (145 in/min)	5,080 mm/min (200 in/min)	5,588 mm/min (220 in/min)
13 mm (1/2 in.)	1,270 mm/min (50 in/min)	1,778 mm/min (70 in/min)	2,413 mm/min (95 in/min)
19 mm (3/4 in.)	610 mm/min (24 in/min)	914 mm/min (36 in/min)	1,270 mm/min (50 in/min)
25 mm (1 in.)	305 mm/min (12 in/min)	533 mm/min (21 in/min)	762 mm/min (30 in/min)
32 mm (1-1/4 in.)	Not applicable	330 mm/min (13 in/min)	508 mm/min (20 in/min)

* Maximum cut speeds are the results of Hypertherm's laboratory testing. Actual cutting speeds can be different related to different cutting applications.

Gouge capacity

	65 A	85 A	105 A
Maximum Removal metal removal rate on mild steel	4.0 kg/hr (8.8 lb/hr)	8.2 kg/hr (18.2 lb/hr)	8.6 kg/hr (19.1 lb/hr)
Maximum Control metal removal rate on mild steel	2.3 kg/hr (5.1 lb/hr)	4.8 kg/hr (10.6 lb/hr)	7.2 kg/hr (15.9 lb/hr)

Set up the plasma power supply

WARNING

CHANCE OF ELECTRIC SHOCK

Never cut under water or submerge the torch in water. Electric shock can cause serious injury.

WARNING

TOXIC FUMES CAN CAUSE INJURY OR DEATH

Some metals, including stainless steel, can release toxic fumes when cut. Make sure that your work site has sufficient ventilation to make sure that the air quality level meets all local and national standards and regulations. Refer to the *Safety and Compliance Manual* (80669C) for more information.

- Do not use the plasma power supply in rain or snow.
- Put the plasma power supply near the line-disconnect switch or near an approved power receptacle for your installation. The plasma power supply has a 3 m (10 ft) power cord.
- Keep at least 0.25 m (10 inches) of space around the plasma power supply for sufficient ventilation.

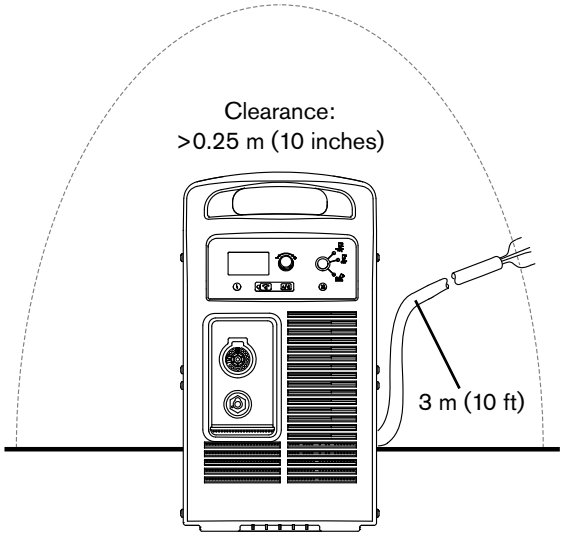

- Put the plasma power supply on a stable, level surface before using. The plasma power supply can tip over if set at an angle greater than 10°.

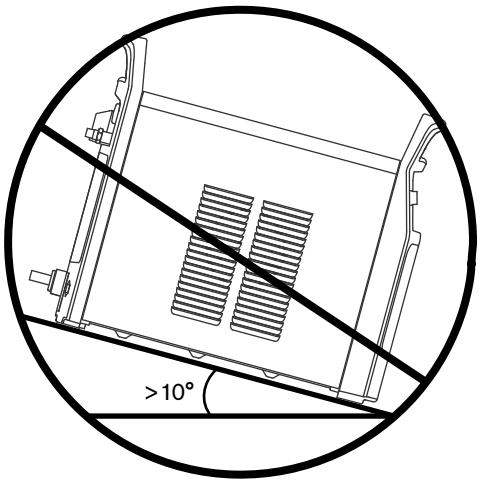

- Do not put the plasma power supply on its side. Doing so can cause a blockage of the air circulation necessary to keep internal components cool.

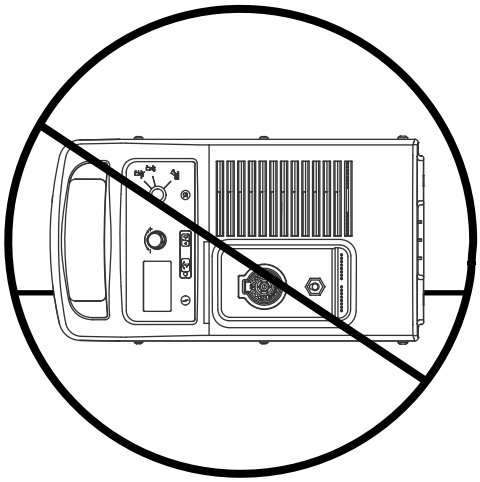

Plasma power supply dimensions and weights

Powermax65 SYNC and Powermax85 SYNC

Figure 1 – Powermax65 SYNC and Powermax85 SYNC dimensions

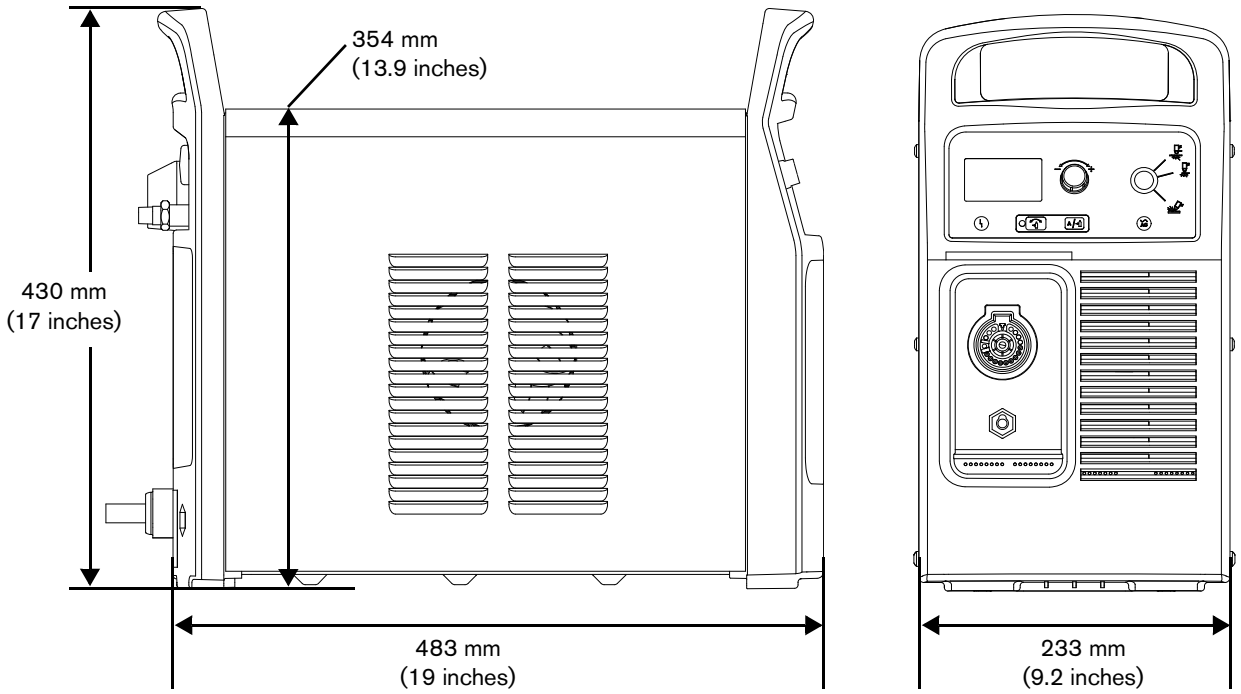

Table 1 – Powermax65 SYNC and Powermax85 SYNC weights with power cords

Powermax65 SYNC		Powermax85 SYNC	
200 V – 600 V CSA	380 V CCC / 400 V CE	200 V – 600 V CSA	380 V CCC / 400 V CE
24.3 kg (54 lb)	20.6 kg (45 lb)	27.2 kg (60 lb)	23.5 kg (52 lb)

For hand torch weights, refer to Weights on page 110. For machine torch weights, refer to the *Powermax65/85/105 SYNC Mechanized Cutting Guide* (810480).

Powermax105 SYNC

Figure 2 – Powermax105 SYNC dimensions

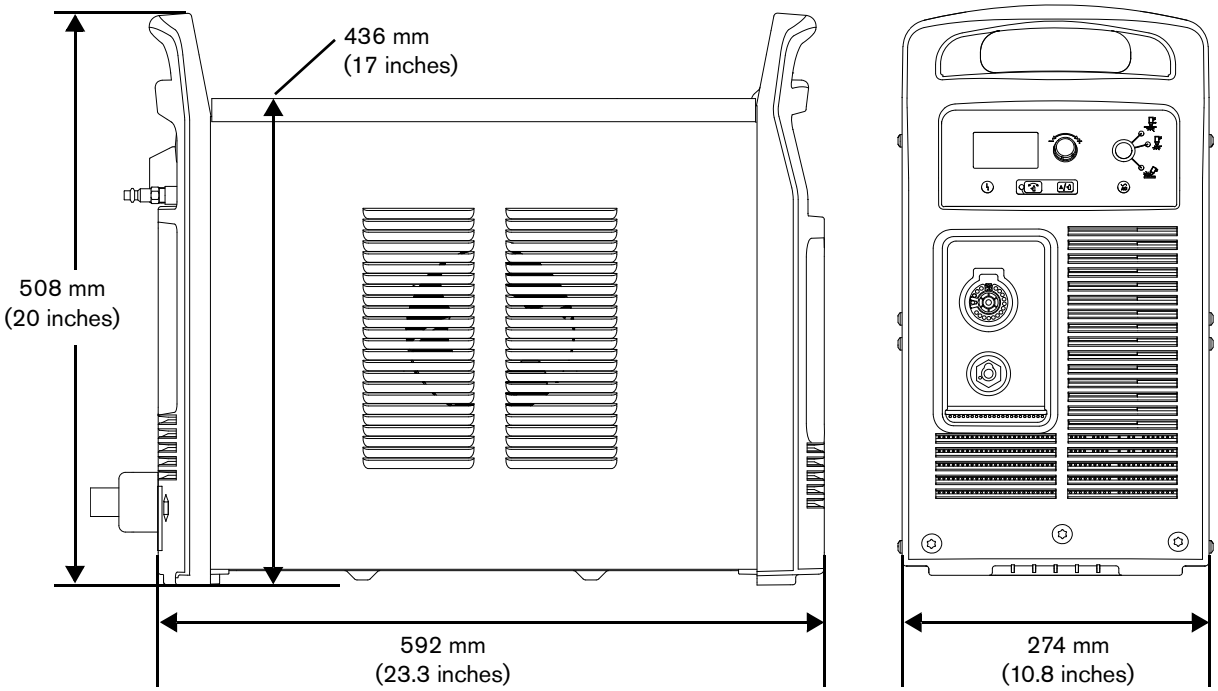

Table 2 – Powermax105 SYNC weight with power cord

200 V – 600 V CSA	230 V – 400 V CE	380 V CCC / 400 V CE
39.7 kg (88 lb)	39.5 kg (87 lb)	36.2 kg (80 lb)

Work lead weights

Work lead	Powermax65 SYNC	Powermax85 SYNC	Powermax105 SYNC
7.6 m (25 ft)	1.3 kg (2.9 lb)	1.6 kg (3.6 lb)	2.3 kg (5.1 lb)
15 m (50 ft)	2.3 kg (5.0 lb)	3.0 kg (6.5 lb)	4.2 kg (9.25 lb)
23 m (75 ft)	3.1 kg (6.9 lb)	4.2 kg (9.25 lb)	6.1 kg (13.4 lb)

For hand torch weights, refer to Weights on page 110. For machine torch weights, refer to the *Powermax65/85/105 SYNC Mechanized Cutting Guide* (810480).

Connect to electrical power

Use the Hypertherm input current ratings to select conductor sizes for power connection and installation instructions. The Hypertherm ratings are designated **HYP** on the data plate on the rear of the plasma power supply. Use the higher HYP input current value for installation purposes. Refer to Find system specifications on the data plate on page 28 for a sample data plate.

NOTICE

Protect the circuit with appropriately sized time-delay fuses and a line-disconnect switch.

The maximum output voltage changes related to input voltage and the circuit's amperage. Because the current draw changes during startup, time-delay fuses are recommended. Time-delay fuses are resistant to currents up to 10 times the rated value for short periods of time.

NOTICE

Do not use phase converters to supply 3-phase power to your Powermax plasma power supply.

Hypertherm does not warranty systems that have been damaged as a result of poor power quality from phase converters or incoming line power.

Install a line-disconnect switch

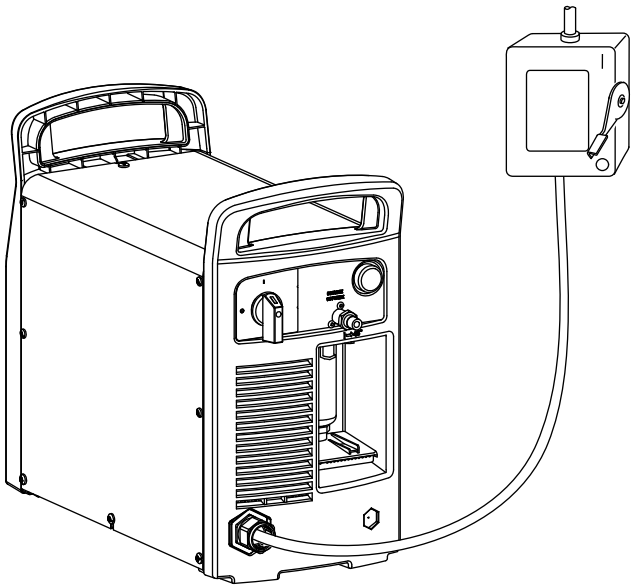

- Use a line-disconnect switch for each plasma power supply so that the operator can stop the incoming power quickly in an emergency.
- Put the switch in a location that it is easily accessible to the operator. Installation must be done by a licensed electrician according to national and local codes.
- The interrupt level of the switch must equal or be more than the continuous rating of the fuses.
- The switch must also do the following:
  - Isolate the electrical equipment and disconnect all live conductors from the incoming supply voltage when in the OFF position.
  - Have one OFF and one ON position that are clearly marked with **O** (OFF) and **I** (ON).
  - Have an external operating handle that can be locked in the OFF position.

- ❑ Contain a power-operated mechanism that operates as an emergency stop.
- ❑ Have approved time-delay fuses installed. Refer to Voltage configurations on page 40 for recommended fuse sizes.

Requirements for grounding

To make sure of personal safety and correct operation, and to decrease electromagnetic interference (EMI), the plasma power supply must be correctly grounded.

- The plasma power supply must be grounded through the power cord according to national and local electrical codes.
- 1-phase service must be of the 3-wire type with a green or green/yellow wire for the protective earth ground and must comply with national and local requirements. **Do not use a 2-wire service.**
- 3-phase service must be of the 4-wire type with a green or green/yellow wire for protective earth ground and must comply with national and local requirements.

Refer to the *Safety and Compliance Manual* (80669C) for more information on grounding.

For mechanized cutting systems, refer to *EMI grounding and shielding best practices* in the *Powermax65/85/105 SYNC Mechanized Cutting Guide* (810480).

Rated output (cutting power) of the plasma power supply

Wattage output shows a plasma power supply's cutting power more than its amperage output. The rated outputs for the systems are as follows:

	Powermax65 SYNC	Powermax85 SYNC	Powermax105 SYNC
Maximum output amperage	20 A – 65 A	25 A – 85 A	30 A – 105 A
Maximum rated output voltage	139 VDC	143 VDC	160 VDC
Cutting power	9.0 kW	12.2 kW	16.8 kW

To calculate the cutting power in watts (W), multiply the maximum output amperage (A) by the maximum rated output voltage (VDC). For example:

65 A x 139 VDC = 9035 W (9.0 kW)

Voltage configurations

The plasma power supply automatically adjusts for correct operation at the current input voltage. You do not have to change or rewire components. But you must do the following:

- Install the Hypertherm cartridge in the torch. Refer to Step 3 – Install the cartridge on page 64.
- Make sure that the output current (A) is correct for the cartridge that you installed. If necessary, turn the adjustment knob on the front panel to adjust the output current. Refer to Step 6 – Adjust the output current (A) and operating mode if necessary on page 70.

To operate the plasma power supply at full output and at its rated duty cycle (refer to Prevent overheating on page 81), you must make your electrical service the correct size. The following tables show the maximum rated output for typical input voltages. The output setting that you use relates to the thickness of the workpiece and the limit of the input power to the plasma power supply.

The recommended fuse sizes let spikes in input current occur when you stretch the plasma arc. Stretching the plasma arc is common in some applications, such as gouging.

Powermax65 SYNC

CSA configurations (1-phase)

Input voltage at 50 Hz/60 Hz*	200 V – 208 V	230 V – 240 V	480 V
Input current at rated output (65 A × 139 VDC = 9.0 kW)	52 A / 50 A	44 A	22 A
Input current during arc stretch	74 A	74 A	38 A
Fuse (time-delay)	80 A	80 A	40 A

* All models have a voltage tolerance of +10% / -15%.

CSA configurations (3-phase)

Input voltage at 50 Hz/60 Hz*	200 V – 208 V	230 V – 240 V	400 V	480 V – 600 V
Input current at rated output (65 A × 139 VDC = 9.0 kW)	32 A / 31 A	27 A	15 A	13 A
Input current during arc stretch	45 A	45 A	27 A	23 A
Fuse (time-delay)	50 A	50 A	30 A	25 A

* All models have a voltage tolerance of +10% / -15%.

CE/CCC configurations (3-phase)

Input voltage at 50 Hz/60 Hz*	380 V	400 V
Input current at rated output (65 A × 139 VDC = 9.0 kW)	15.5 A	15 A
Input current during arc stretch	27 A	27 A
Fuse (time-delay)	30 A	30 A

* All models have a voltage tolerance of +10% / -15%.

Powermax85 SYNC

CSA configurations (1-phase)

Input voltage at 50 Hz/60 Hz*	200 V – 208 V	230 V – 240 V	480 V
Input current at rated output (85 A × 143 VDC = 12.2 kW)	70 A / 68 A	58 A	29 A
Input current during arc stretch	98 A	98 A	50 A
Fuse (time-delay)	100 A	100 A	50 A

* All models have a voltage tolerance of +10% / -15%.

CSA configurations (3-phase)

Input voltage at 50 Hz/60 Hz*	200 V – 208 V	230 V – 240 V	400 V	480 V	600 V
Input current at rated output (85 A × 143 VDC = 12.2 kW)	42 A / 40 A	35 A	21 A	18 A	17 A
Input current during arc stretch	60 A	60 A	38 A	31 A	30 A
Fuse (time-delay)	60 A	60 A	40 A	30 A	30 A

* All models have a voltage tolerance of +10% / -15%.

CE/CCC configurations (3-phase)

Input voltage at 50 Hz/60 Hz*	380 V	400 V
Input current at rated output (85 A × 143 VDC = 12.2 kW)	20.5 A	19.5 A
Input current during arc stretch	38 A	38 A
Fuse (time-delay)	40 A	40 A

* All models have a voltage tolerance of +10% / -15%.

Powermax105 SYNC

CSA configurations (3-phase)

Input voltage at 50 Hz/60 Hz*	200 V	208 V	240 V	480 V	600 V
Input current at rated output (105 A x 160 VDC = 16.8 kW)	58 A	56 A	49 A	25 A	22 A
Input current during arc stretch	82 A	82 A	78 A	40 A	35 A
Fuse (time-delay)	80 A	80 A	80 A	40 A	40 A

* All models have a voltage tolerance of +10% / -15%.

230 V – 400 V CE configurations (3-phase)

Input voltage at 50 Hz/60 Hz*	230 V	400 V
Input current at rated output (105 A x 160 VDC = 16.8 kW)	50 A	29 A
Input current during arc stretch	80 A	46 A
Fuse (time-delay)	80 A	50 A

* All models have a voltage tolerance of +10% / -15%.

380 V CCC / 400 V CE configurations (3-phase)

Input voltage at 50 Hz/60 Hz*	CCC 380 V	CE 400 V
Input current at rated output (105 A x 160 VDC = 16.8 kW)	30 A	28 A
Input current during arc stretch	42 A	44 A
Fuse (time-delay)	50 A	50 A

* All models have a voltage tolerance of +10% / -15%.

Prepare the power cord and plug

Install the power plug

A 3 m (10 foot) 3-phase power cord with the following specifications is included with all Powermax65 SYNC, Powermax85 SYNC, and Powermax105 SYNC plasma power supplies. Refer to Figure 3 on page 45.

This power cord does not come with a plug. To operate the plasma power supply, you must first have a licensed electrician install an approved plug on the power cord – or connect the power cord to a line-disconnect switch – according to all national and local electrical codes.

Model	Configurations	Power cord
Powermax65 SYNC	200 V – 600 V CSA	8 AWG 4-wire
	380 V CCC / 400 V CE	2.5 mm², 4-wire style H07RN-F*
Powermax85 SYNC	200 V – 600 V CSA	8 AWG 4-wire
	380 V CCC / 400 V CE	4 mm², 4-wire style H07RN-F*
Powermax105 SYNC	200 V – 600 V CSA	6 AWG 4-wire
	230 V – 400 V CE	10 mm², 4-wire HAR
	380 V CCC / 400 V CE	6 mm², 4-wire H07RN-F* and HAR

* Style H07RN-F cord is a harmonized, heavy-duty, flexible, rubber-insulated, black-neoprene-jacketed multi-conductor IEC60245-4 / EN50525 European power cord with **CE** printed on the cord. The H07RN-F cord used by Hypertherm also has CCC certification to GB/T 5013.4, with **CCC** printed on the cord.

Install the power cord (if necessary)

If your work site makes it necessary to install a different power cord than the one that comes with the system, refer to Figure 3 on page 45 for instructions on how to prepare the power cord wires and to connect them correctly in the plasma power supply.

Figure 3 – Install a power cord

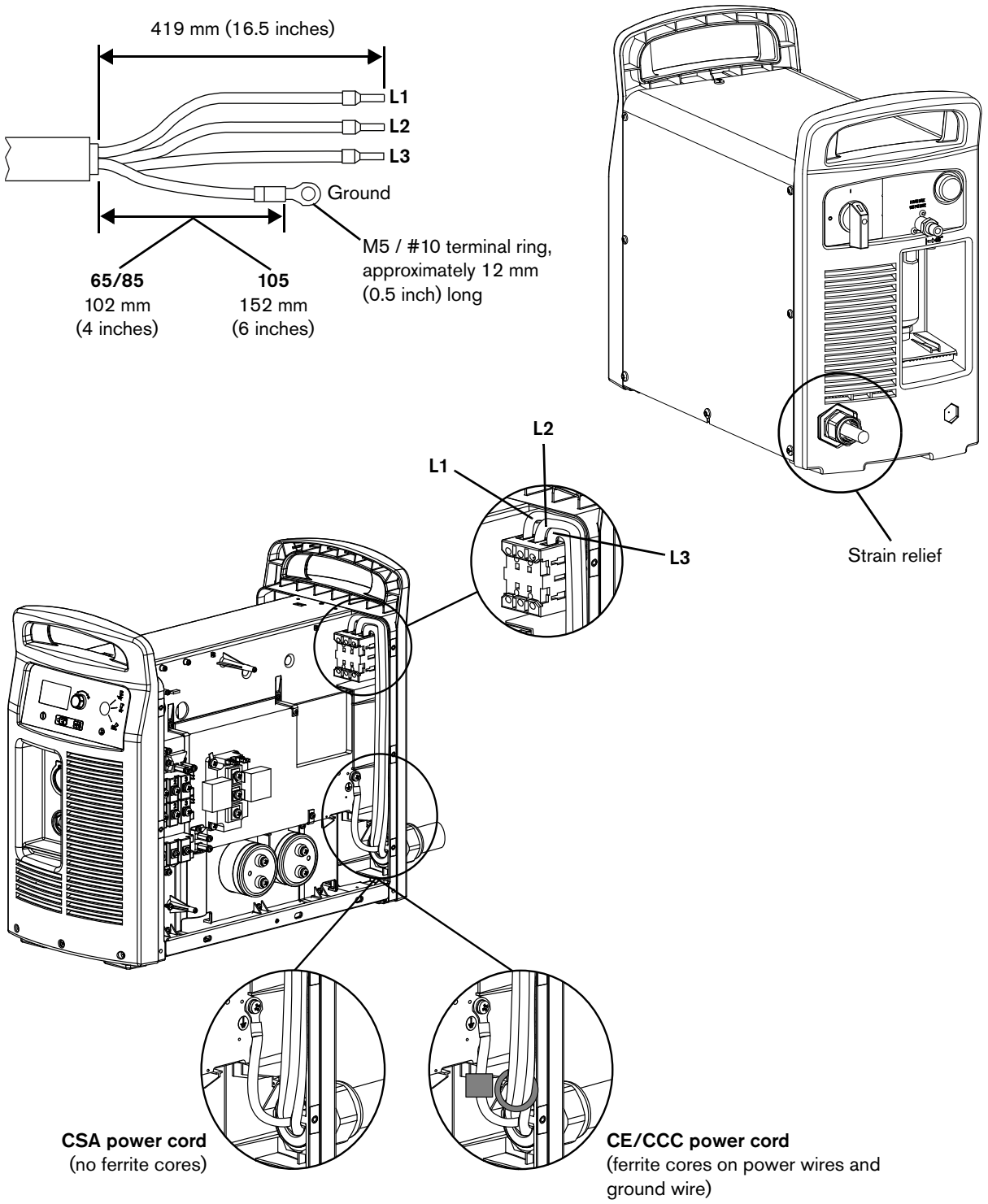

For more instructions, refer to one of the following Field Service Bulletins:

- *Powermax65/85 SYNC Power Cord and Strain Relief Replacement* (807020)
- *Powermax105 SYNC Power Cord and Strain Relief Replacement* (810420)

Install a 1-phase power cord (CSA systems only) (if necessary)

You can operate a Powermax65/85 SYNC **CSA** plasma power supply on 1-phase power, but the Powermax65/85 SYNC **CE/CCC** plasma power supply is 3-phase only.

To operate a Powermax65 SYNC CSA plasma power supply on 1-phase power, install a 10 mm^2 (8 AWG) 3-wire power cord. To operate a Powermax85 SYNC CSA plasma power supply on 1-phase power, install a 16 mm^2 (6 AWG) 3-wire power cord. The power cord must be connected by a licensed electrician.

Refer to the *Powermax65/85 SYNC Power Cord and Strain Relief Replacement Field Service Bulletin* (807020) for instructions.

Use an extension cord (if necessary)

Use an extension cord that meets the following requirements:

- Is an approved wire gauge for the cord length and plasma power supply voltage
- Complies with national and local codes

Extension cords can cause the machine to receive less input voltage than the output of the circuit. This can put a limit on the operation of your plasma power supply.

The following tables give the recommended gauge sizes for various lengths and input voltages.

The lengths in the tables are the length of the extension cord only; they do not include the plasma power supply's power cord.

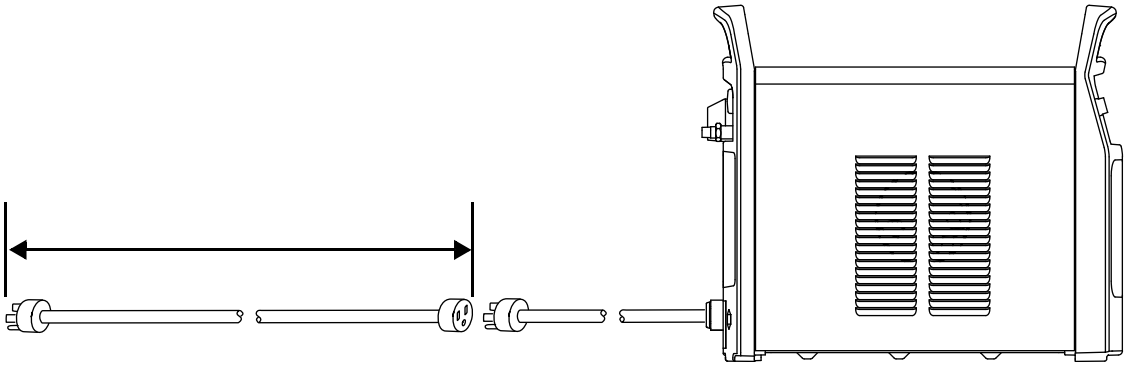

Powermax65 SYNC systems

Table 3 – 65 A CSA

Extension cord length		< 3 m (< 10 ft)	3 m – 7.5 m (10 ft – 25 ft)	7.5 m – 15 m (25 ft – 50 ft)	15 m – 30 m (50 ft – 100 ft)	30 m – 45 m (100 ft – 150 ft)
Input voltage (VAC)	**Phase**	**Extension cord gauge**				
200 – 240	1	10 mm² (8 AWG)	10 mm² (8 AWG)	10 mm² (8 AWG)	16 mm² (6 AWG)	25 mm² (4 AWG)
480	1	4 mm² (12 AWG)	4 mm² (12 AWG)	4 mm² (12 AWG)	6 mm² (10 AWG)	6 mm² (10 AWG)
200 – 240	3	6 mm² (10 AWG)	6 mm² (10 AWG)	6 mm² (10 AWG)	10 mm² (8 AWG)	16 mm² (6 AWG)
400/480	3	4 mm² (12 AWG)	4 mm² (12 AWG)	4 mm² (12 AWG)	4 mm² (12 AWG)	4 mm² (12 AWG)
600	3	4 mm² (12 AWG)	4 mm² (12 AWG)	4 mm² (12 AWG)	4 mm² (12 AWG)	4 mm² (12 AWG)

Table 4 – 65 A CE/CCC

Extension cord length		< 3 m (< 10 ft)	3 m – 7.5 m (10 ft – 25 ft)	7.5 m – 15 m (25 ft – 50 ft)	15 m – 30 m (50 ft – 100 ft)	30 m – 45 m (100 ft – 150 ft)
Input voltage (VAC)	**Phase**	**Extension cord gauge**				
380	3	4 mm²	4 mm²	4 mm²	4 mm²	4 mm²
400	3	4 mm²	4 mm²	4 mm²	4 mm²	4 mm²

Powermax85 SYNC systems

Table 5 – 85 A CSA

Extension cord length		< 3 m (< 10 ft)	3 m – 7.5 m (10 ft – 25 ft)	7.5 m – 15 m (25 ft – 50 ft)	15 m – 30 m (50 ft – 100 ft)	30 m – 45 m (100 ft – 150 ft)
Input voltage (VAC)	**Phase**	**Extension cord gauge**				
200 – 240	1	16 mm² (6 AWG)	16 mm² (6 AWG)	16 mm² (6 AWG)	25 mm² (4 AWG)	35 mm² (2 AWG)
480	1	6 mm² (10 AWG)	6 mm² (10 AWG)	6 mm² (10 AWG)	10 mm² (8 AWG)	10 mm² (8 AWG)
200 – 240	3	10 mm² (8 AWG)	10 mm² (8 AWG)	10 mm² (8 AWG)	16 mm² (6 AWG)	25 mm² (4 AWG)
400/480	3	6 mm² (10 AWG)	6 mm² (10 AWG)	6 mm² (10 AWG)	6 mm² (10 AWG)	6 mm² (10 AWG)
600	3	6 mm² (10 AWG)	6 mm² (10 AWG)	6 mm² (10 AWG)	6 mm² (10 AWG)	6 mm² (10 AWG)

Table 6 – 85 A CE/CCC

Extension cord length		< 3 m (< 10 ft)	3 m – 7.5 m (10 ft – 25 ft)	7.5 m – 15 m (25 ft – 50 ft)	15 m – 30 m (50 ft – 100 ft)	30 m – 45 m (100 ft – 150 ft)
Input voltage (VAC)	**Phase**	**Extension cord gauge**				
380	3	6 mm²	6 mm²	6 mm²	6 mm²	6 mm²
400	3	6 mm²	6 mm²	6 mm²	6 mm²	6 mm²

Powermax105 SYNC systems

Table 7 – 200 V – 600 V CSA

Extension cord length		< 3 m (< 10 ft)	3 m – 7.5 m (10 ft – 25 ft)	7.5 m – 15 m (25 ft – 50 ft)	15 m – 30 m (50 ft – 100 ft)	30 m – 45 m (100 ft – 150 ft)
Input voltage (VAC)	**Phase**	**Extension cord gauge**				
200 – 240	3	16 mm² (6 AWG)	16 mm² (6 AWG)	16 mm² (6 AWG)	25 mm² (4 AWG)	35 mm² (2 AWG)
480 – 600	3	6 mm² (10 AWG)	6 mm² (10 AWG)	6 mm² (10 AWG)	6 mm² (10 AWG)	6 mm² (10 AWG)

Table 8 – 230 V – 400 V CE

Extension cord length		< 3 m (< 10 ft)	3 m – 7.5 m (10 ft – 25 ft)	7.5 m – 15 m (25 ft – 50 ft)	15 m – 30 m (50 ft – 100 ft)	30 m – 45 m (100 ft – 150 ft)
Input voltage (VAC)	**Phase**	**Extension cord gauge**				
230	3	16 mm²	16 mm²	16 mm²	25 mm²	25 mm²
400	3	10 mm²	10 mm²	10 mm²	10 mm²	10 mm²

Table 9 – 380 V CCC / 400 V CE

Extension cord length		< 3 m (< 10 ft)	3 m – 7.5 m (10 ft – 25 ft)	7.5 m – 15 m (25 ft – 50 ft)	15 m – 30 m (50 ft – 100 ft)	30 m – 45 m (100 ft – 150 ft)
Input voltage (VAC)	**Phase**	**Extension cord gauge**				
380	3	10 mm²	10 mm²	10 mm²	10 mm²	10 mm²
400	3	10 mm²	10 mm²	10 mm²	10 mm²	10 mm²

Use a generator (if necessary)

Make sure that you do the following when you use a generator:

- Only use a generator that meets the plasma power supply's requirements. Refer to Powermax65 SYNC and Powermax85 SYNC systems on page 51 and Powermax105 SYNC systems on page 52.
- Adjust the output current (A) if necessary related to the rating, age, and condition of the generator. Refer to Step 6 – Adjust the output current (A) and operating mode if necessary on page 70.
- Use one of the following recommended generators when full arc stretch is necessary, such as for many gouging applications. These generators let spikes in input current occur when you stretch the plasma arc.
  - 15 kW generator for Powermax65 SYNC
  - 20 kW generator for Powermax85 SYNC
  - 30 kW generator for Powermax105 SYNC
- If a fault occurs, set the power switch on the plasma power supply to OFF (**O**). Wait approximately 1 minute before you set the power switch to ON (**I**).

Problems with input line voltage (fault codes 0-13-0, 0-60-*n*, and 0-61-0) can occur more frequently with some generators. Refer to Troubleshoot power-related problems with generators on page 148.

Powermax65 SYNC and Powermax85 SYNC systems

Generators used with a Powermax65 SYNC or Powermax85 SYNC must meet the requirements in Table 10 and Table 11.

Table 10 – Voltage requirements

CSA	1-phase: 50 Hz/60 Hz, 230 VAC / 240 VAC* 3-phase: 50 Hz/60 Hz, 200 VAC – 600 VAC
CE/CCC	3-phase: 50 Hz/60 Hz, 380 VAC / 400 VAC

* A 4-wire 1-phase connection (for example, NEMA 14-50R) is necessary for some generators. In this condition, use an adapter to connect the plasma power supply's 3-wire power cord plug (NEMA 6-50P) to the 4-wire connector on the generator. Refer to Install a 1-phase power cord (CSA systems only) (if necessary) on page 46 for more information.

Table 11 – Engine drive requirements

Engine drive rating	Plasma power supply output current	Performance (arc stretch)
20 kW	85 A	Full
15 kW	70 A	Decreased
15 kW	65 A	Full
12 kW	65 A	Decreased
12 kW	40 A	Full
8 kW	40 A	Decreased
8 kW	30 A	Full

Powermax105 SYNC systems

Generators used with the Powermax105 SYNC must meet the requirements in Table 12 and Table 13.

Table 12 – Voltage requirements

200 V – 600 V CSA	3-phase, 50 Hz/60 Hz, 200 VAC – 600 VAC
230 V – 400 V CE	3-phase, 50 Hz/60 Hz, 230 VAC – 400 VAC
380 V CCC / 400 V CE	3-phase, 50 Hz/60 Hz, 380 VAC / 400 VAC

Table 13 – Engine drive requirements

Engine drive rating	Plasma power supply output current	Performance (arc stretch)
30 kW	105 A	Full
22.5 kW – 25 kW	105 A	Decreased
20 kW	85 A	Full
15 kW	70 A	Decreased
15 kW	65 A	Full
12 kW	65 A	Decreased
12 kW	40 A	Full
8 kW	40 A	Decreased
8 kW	30 A	Full

Connect the gas supply

⚠ WARNING

EXPLOSION HAZARD

The filter bowl in the plasma power supply can explode if the gas pressure is more than 9.3 bar (135 psi). Never use more than the maximum gas pressure of 9.3 bar (135 psi).

Refer to the figure on page 54.

1. Get an inert-gas hose with the correct internal diameter ❶.
   - For hoses that are less than 15 m (50 feet), use an internal diameter of 10 mm (3/8 inch) or greater.
   - For hoses that are 15 m – 30 m (50 feet – 100 feet), use an internal diameter of 13 mm (1/2 inch) or greater.

   Do not use hoses with an internal diameter less than 10 mm (3/8 inch). Hoses that are too small can cause problems with cut quality and cut performance.

2. Make sure that the correct gas inlet fitting is installed.
   - CSA models come with an industrial interchange quick-disconnect nipple with 1/4 NPT threads ❷. To install, tighten the fitting to 115 kg·cm (100 in·lb). The fitting comes with thread sealant applied.
   - CE/CCC models come with a British Pipe Thread adapter G-1/4 BSPP with 1/4 NPT threads ❸. To install, tighten the adapter to 104 kg·cm (90 in·lb).

NOTICE

PTFE TAPE CAN CAUSE CLOGGED VALVES, REGULATORS, AND TORCHES

Never use PTFE tape on any joint preparation. Use only a liquid or paste thread sealant on male threads.

3. Connect the gas hose to the gas inlet fitting. Refer to Inlet gas pressure requirements (while gas is flowing) on page 57.

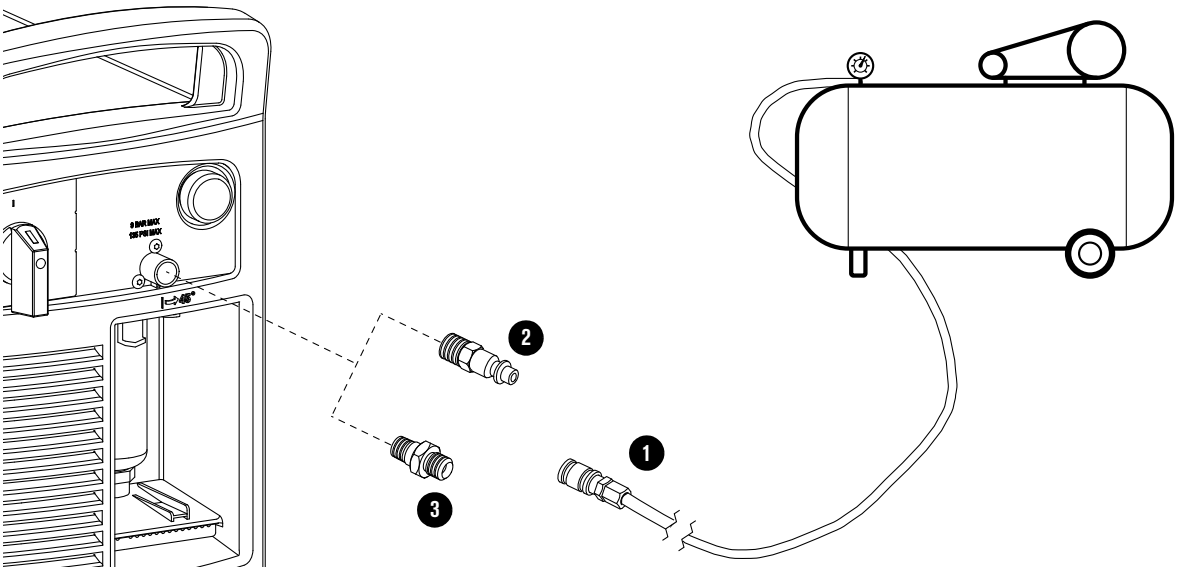

Gas supply source

Hypertherm recommends that air compressors supply air that meets the following requirements of *ISO Standard 8573-1:2010 Class 1.4.2:**

Maximum particle count in 1.0 m³:
- 20,000 at 0.1 microns – 0.5 microns
- 400 at 0.5 microns – 1.0 microns
- 10 at 1.0 microns – 5.0 microns

Maximum water vapor pressure dewpoint: 3°C (37°F)**

Maximum oil concentration: 0.1 mg/m³ (for aerosol, liquid, and vapor)

* **Important:** Any air compressors that supply air to the cutting system must remove oil prior to air delivery.

** Speak to your air compressor manufacturer if you operate the cutting system in temperatures colder than 3°C (37°F) or if you are unsure that the air compressor can comply with the ISO standard for air quality.

NOTICE

DIRTY, OILY AIR CAN CAUSE DAMAGE TO THE AIR FILTER BOWL

Synthetic lubricants containing esters that are used in some air compressors can cause damage to the polycarbonates in the air filter bowl. Add additional gas filtration if necessary.

- Use shop-compressed gas or cylinder-compressed gas.
  - Use a high-pressure regulator on either type of gas supply. The regulator must be able to deliver gas to the air inlet on the plasma power supply at the specified flow rate and specified pressure.
- **Use only clean, moisture-free gas.**
  - Oil, water, vapor, and other contaminants in the gas supply can cause damage to internal components over time.
  - Poor gas supply quality causes:
    - Decreased cut quality and cut speeds
    - Decreased cut thickness capability
    - Decreased consumable life

    To address these problems, use an optional air filtration system. Refer to Add additional gas filtration (if necessary) on page 59.

High-pressure gas cylinders

⚠ WARNING

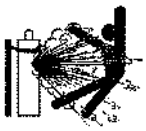

GAS CYLINDERS CAN EXPLODE IF DAMAGED

Gas cylinders contain gas under high pressure. If damaged, a cylinder can explode.

For high pressure regulators, comply with the manufacturer's guidelines for safe installation, operation, and maintenance.

Before plasma cutting with compressed gas, read the safety instructions in the *Safety and Compliance Manual* (80669C). Failure to comply with safety instructions can cause personal injury or equipment damage.

⚠ WARNING

EXPLOSION HAZARD – CUTTING WITH FLAMMABLE OR OXIDIZING GASES

Do not use flammable or oxidizing gases with Powermax systems. These gases can cause explosive conditions during plasma cutting operations.

An example of an oxidizing gas is oxygen. Examples of flammable gases are acetylene, propylene, methane, and pure hydrogen. Refer to the *Safety and Compliance Manual* (80669C) for more information.

You can use the following gases to cut with this plasma power supply. Refer to Hypertherm plasma power supply ratings on page 21 for requirements on gas quality.

- Air
- Nitrogen
  - **Do NOT use oxygen to cut with Powermax systems**
- F5 (stainless steel only)
  - Refer to the *Powermax65/85/105 SYNC Mechanized Cutting Guide* (810480).

If you use high-pressure gas cylinders as the gas supply, then do the following:

- Refer to the manufacturer's specifications for installation and maintenance procedures of high-pressure regulators.
- Make sure that the cylinder has an adjustable high-pressure regulator with the following capabilities:
  - Gas outlet pressures up to 9.3 bar (135 psi). **Never use more than the maximum gas pressure of 9.3 bar (135 psi).**
  - The following gas flow rates:
    - Powermax65/85 SYNC: 210 slpm (450 scfh)
    - Powermax105 SYNC: 260 slpm (550 scfh)
- Make sure that the cylinder valves are clean and free of oil, grease, and other contaminants. Open each cylinder valve just long enough to blow out any dust that is possibly present.
- Connect the supply hose correctly to the cylinder.

Inlet gas pressure requirements (while gas is flowing)

The following inlet gas pressure specifications apply for air, nitrogen, and F5 gases.

Maximum inlet pressure

Never exceed the maximum gas pressure of 9.3 bar (135 psi).

⚠ WARNING

EXPLOSION HAZARD

The filter bowl in the plasma power supply can explode if the gas pressure is more than 9.3 bar (135 psi). Never use more than the maximum gas pressure of 9.3 bar (135 psi).

Optimum inlet pressure

For optimum system performance, make sure that the inlet gas pressure stays between 7.6 bar– 8.3 bar (110 psi – 120 psi) while gas is flowing.

Keep the inlet gas pressure at the optimum range to make sure that system performance is good for all the combinations of plasma power supply, torch lead length, and cutting and gouging processes that you use.

Minimum inlet pressure

The following tables show the minimum inlet gas pressure requirements for each Powermax SYNC system. Use the correct pressure for your combination of operating mode, cartridge type, and torch lead length.

If your inlet gas pressure goes below these levels while gas is flowing, a fault condition can occur. A pressure-related fault code on the LCD screen can be for a notification or for a condition that stops the cutting process. Hypertherm recommends that you do the recommended steps to troubleshoot the fault. Refer to Fault codes on page 132 and Examine the gas pressure on page 126.

Additional gas filtration installed between the gas supply and the plasma power supply can have an effect on gas pressure and gas flow. Speak to the filter manufacturer about gas pressure requirements. Hypertherm recommends that you install an inline pressure gauge at the gas inlet on the back of the plasma power supply. Use this gauge to monitor the gas pressure at the plasma power supply, after all external filtration.

Cutting

	Torch lead length		
	7.6 m (25 ft)	**15.2 m (50 ft)**	**22.9 m (75 ft)**
Powermax65 SYNC Powermax85 SYNC	5.2 bar (75 psi)	5.5 bar (80 psi)	5.9 bar (85 psi)
Powermax105 SYNC	5.5 bar (80 psi)	5.9 bar (85 psi)	6.2 bar (90 psi)

Maximum Control gouging

	Torch lead length		
	7.6 m (25 ft)	**15 m (50 ft)**	**23 m (75 ft)**
Powermax65 SYNC Powermax85 SYNC Powermax105 SYNC	4.1 bar (60 psi)	4.5 bar (65 psi)	4.8 bar (70 psi)

Maximum Removal gouging

	Torch lead length		
	7.6 m (25 ft)	**15 m (50 ft)**	**23 m (75 ft)**
Powermax65 SYNC Powermax85 SYNC Powermax105 SYNC	4.1 bar (60 psi)	4.5 bar (65 psi)	4.8 bar (70 psi)

Recommended gas inlet flow rates

Process	Powermax65 SYNC and Powermax85 SYNC	Powermax105 SYNC
Cutting	210 slpm (450 scfh, 7.5 scfm) at a minimum 5.9 bar (85 psi)	260 slpm (550 scfh, 9.1 scfm) at a minimum 6.2 bar (90 psi)
Maximum Removal gouging	210 slpm (450 scfh, 7.5 scfm) at a minimum 4.8 bar (70 psi)	260 slpm (550 scfh, 9.1 scfm) at a minimum 4.8 bar (70 psi)
Maximum Control gouging	210 slpm (450 scfh, 7.5 scfm) at a minimum 4.8 bar (70 psi)	260 slpm (550 scfh, 9.1 scfm) at a minimum 4.8 bar (70 psi)

Refer to the *Powermax65/85/105 SYNC Cut Charts Guide* (810500MU) for flow rates specific to each cutting process specified (related to the type of metal, the type of gas, and the output current).

Add additional gas filtration (if necessary)

It is extremely important to keep a clean, dry gas line to do the following:

- Prevent oil, water, dirt, and other contaminants from causing damage to internal components.
- Get optimal cut quality and consumable life.

Dirty, oily air is the root cause of many common problems that occur in Powermax systems, and in some conditions it can void the warranty on the plasma power supply and on the torch. Refer to the gas quality recommendations in the ratings tables that start on page 21.

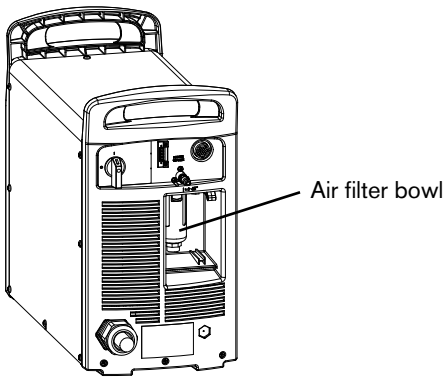

The plasma power supply contains a built-in air filter. Regularly do a check of the filter element inside the air filter bowl and replace as necessary. Refer to Examine the air filter bowl and filter element on page 177.

The built-in air filter must not take the place of sufficient external filtration. If you work in an environment that is extremely warm and humid, or if work site conditions introduce oil, vapors, or other contaminants into the gas line, install an external filtration system that cleans the gas supply before it gets into the plasma power supply.

A 3-stage coalescing filtration system is recommended. A 3-stage filtering system works as follows to clean contaminants from the gas supply.

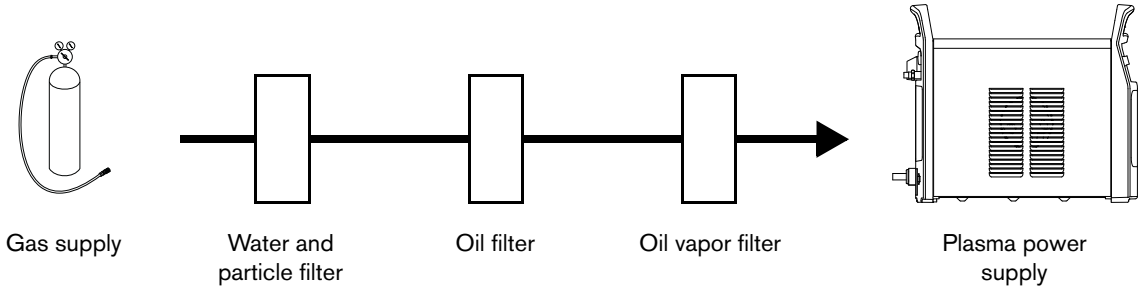

The filtering system must be installed between the gas supply and the plasma power supply.

Additional gas filtration can make higher pressure from the gas supply necessary. For the recommended gas inlet flow rate and pressure, refer to Inlet gas pressure requirements (while gas is flowing) on page 57.

Hypertherm offers the following optional external filter kits:

- Kit 128647: The Eliminizer moisture removal air filter ❶ removes water and dirt from the gas supply. For more information, refer to the *Optional Air Filter Kit and Element Replacement Procedure Field Service Bulletin* (804180).
- Kit 428719: The oil removal air filter ❷ removes oil, oil vapor, and dirt from the gas supply. For more information, refer to the *Optional Oil Removal Air Filter Kit and Element Replacement Field Service Bulletin* (809610).

For additional parts related to these filter kits, refer to the *Powermax65/85/105 SYNC Parts Guide* (810490).

If you use both external filters, install them in the order shown in Figure 4 to prevent damage to the gas line and equipment.

Figure 4 – Optional Hypertherm external filters

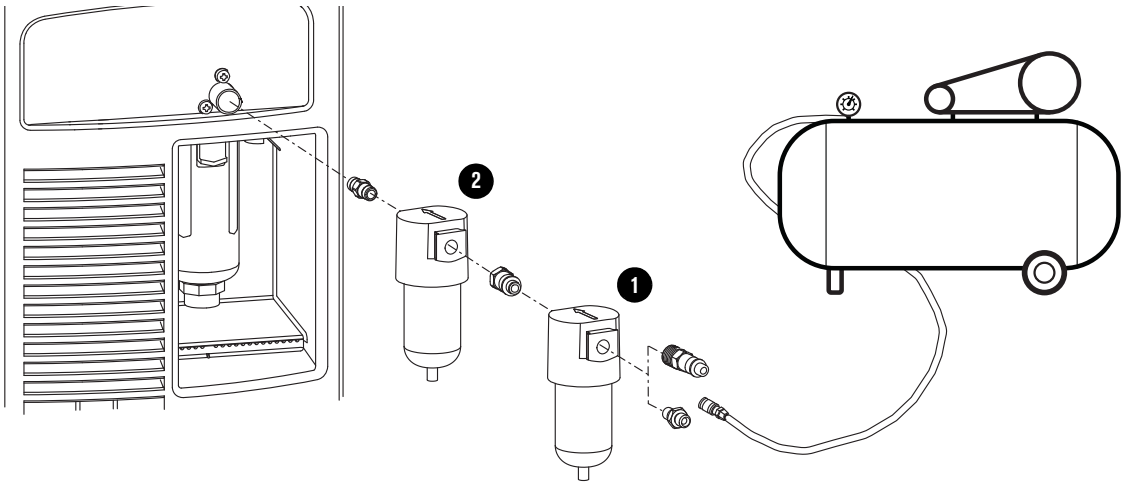

3 Operate the Plasma System

Make sure that the plasma power supply is connected to gas and power

1. Connect the gas supply line to the fitting on the back of the plasma power supply. Refer to page 53.
   - For gas supply requirements, refer to Gas supply source on page 54.
2. Make sure that the plasma power supply's power cord is correctly connected to electrical power according to national and local codes. Refer to Connect to electrical power on page 38, and Prepare the power cord and plug on page 44.

Step 1 – Connect the torch lead

- Always set the power switch on the plasma power supply to OFF (**O**) before you connect or disconnect a torch.
- To connect a hand torch or machine torch, push the connector into the receptacle on the front of the plasma power supply. The connector makes a click when it is fully engaged.
- To disconnect the torch, push the red button on the connector and pull the connector out of the receptacle.

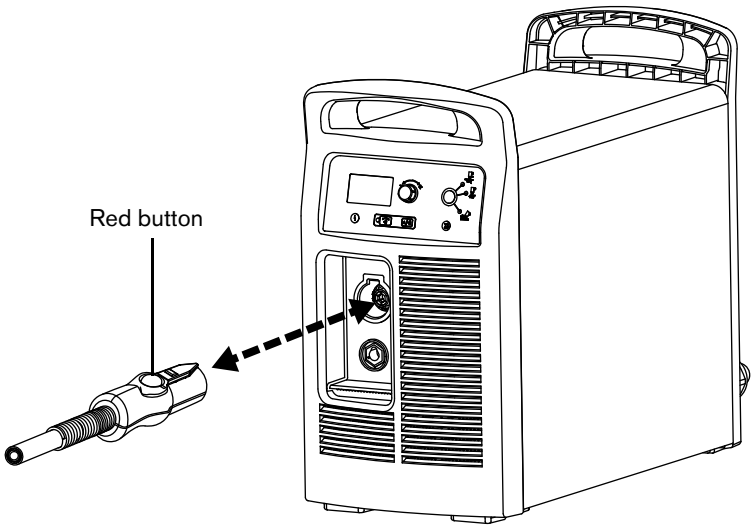

Step 2 – Connect the work lead and work clamp

NOTICE

INCORRECT WORK LEADS CAN CAUSE AN UNSTABLE PLASMA ARC

Work leads are approved for specific amperages, lengths, and connectors. Make sure that you use a work lead that is approved for your plasma power supply. Refer to the *Powermax65/85/105 SYNC Parts Guide* (810490). The amperage of a work lead is identified near the rubber boot of the work lead connector.

Work lead

1. Put the work lead connector in the receptacle on the front of the plasma power supply. Align the key on the connector with the opening at the top of the receptacle.
2. Push the work lead connector all the way into the receptacle. Turn the connector clockwise approximately 1/4 turn until the connector is fully engaged and locked in position.

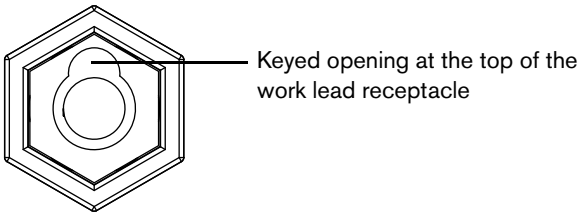

NOTICE

LOOSE WORK LEADS CAN OVERHEAT

Anytime you move the work lead or the plasma power supply, examine the work lead connector to make sure that it is fully connected to the plasma power supply and is not loose.

Work clamp

NOTICE

Do not attach the work clamp under water. If the plasma power supply is below the work clamp, water can get into the plasma power supply through the work lead and cause severe damage.

Do not attach the work clamp to the portion of the workpiece to be cut away.

- **Hand cutting:** The work clamp must be connected to the workpiece that you are cutting.
- **Mechanized cutting:** If you are using this plasma power supply with a mechanized cutting system, you can connect the work clamp directly to the cutting table or to the workpiece you are cutting. Refer to your equipment manufacturer's instructions.
- Make sure that the work clamp makes good metal-to-metal contact with the workpiece or cutting table.
- Remove rust, dirt, paint, coatings, and other debris so that the work clamp makes sufficient contact with the workpiece or cutting table.
- Attach the work clamp as close as possible to the area being cut.

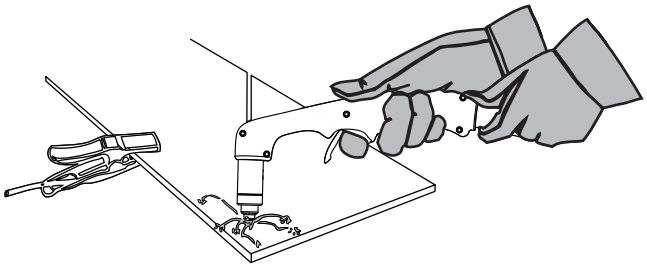

Step 3 – Install the cartridge

⚠ WARNING

INSTANT-ON TORCHES – PLASMA ARC CAN CAUSE INJURY, BURNS

Ignition of the plasma arc occurs immediately when you pull the torch trigger. Before changing the cartridge, one of the following steps is necessary. Whenever possible, complete the first step.

- Set the power switch on the plasma power supply to OFF (**O**).

  OR

- Move the torch-lock switch to the yellow lock (**X**) position. Pull the trigger to make sure that the torch does not fire a plasma arc.

Lock the torch

SmartSYNC torches include a switch that lets you lock the torch. This torch-lock switch prevents the torch from firing accidentally, even when the plasma power supply is ON.

Use this switch to lock the torch when it is not in use, when it is necessary to change the Hypertherm cartridge, or when it is necessary to move the plasma power supply or torch while the plasma power supply is ON.

Torch **LOCK** position:

- The **yellow** label with the "**X**" shows that the torch is not prepared to fire.
- Point the torch away from yourself and others, and pull the trigger to make sure that it does not fire.

  When the torch is locked, the Fault LED comes on, and the Torch Cap Sensor icon and 0-50-1 fault code show on the status screen.

- You CAN install the cartridge.

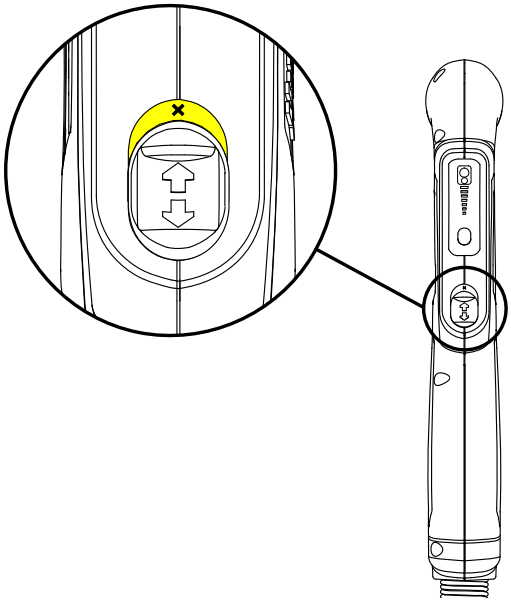

Torch **"ready to fire"** position:

- The **green** label with the "✓" shows that the torch is prepared to fire.
- Do NOT change the cartridge.

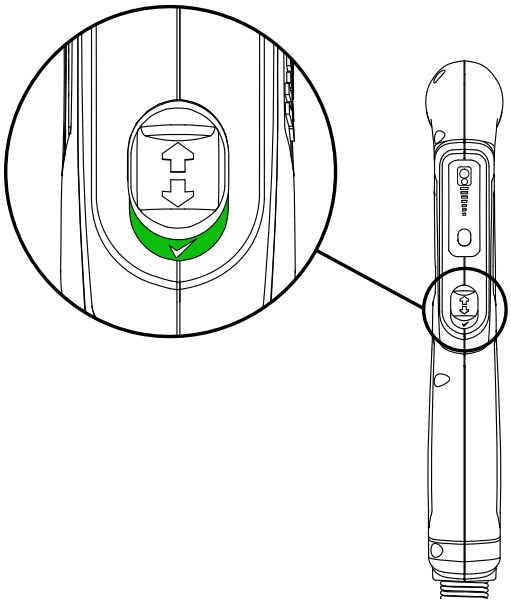

Install the cartridge

Cartridges are not preinstalled on new torches.

1. Make sure that the power switch on the plasma power supply stays OFF (**O**).
2. Make sure that the torch-lock switch on the torch is set to the yellow lock (**X**) position.
3. If this is a new torch, remove the vinyl cap from the torch.
4. Install the correct Hypertherm cartridge for your cutting or gouging application.
   - ❑ **Cutting and piercing with a hand torch:** Refer to Select the correct cutting cartridge on page 95.
   - ❑ **Gouging with a hand torch:** Refer to Select the correct gouging cartridge on page 111.
   - ❑ **Cutting, piercing, and gouging with a machine torch:** Refer to the *Powermax65/85/105 SYNC Mechanized Cutting Guide* (810480).

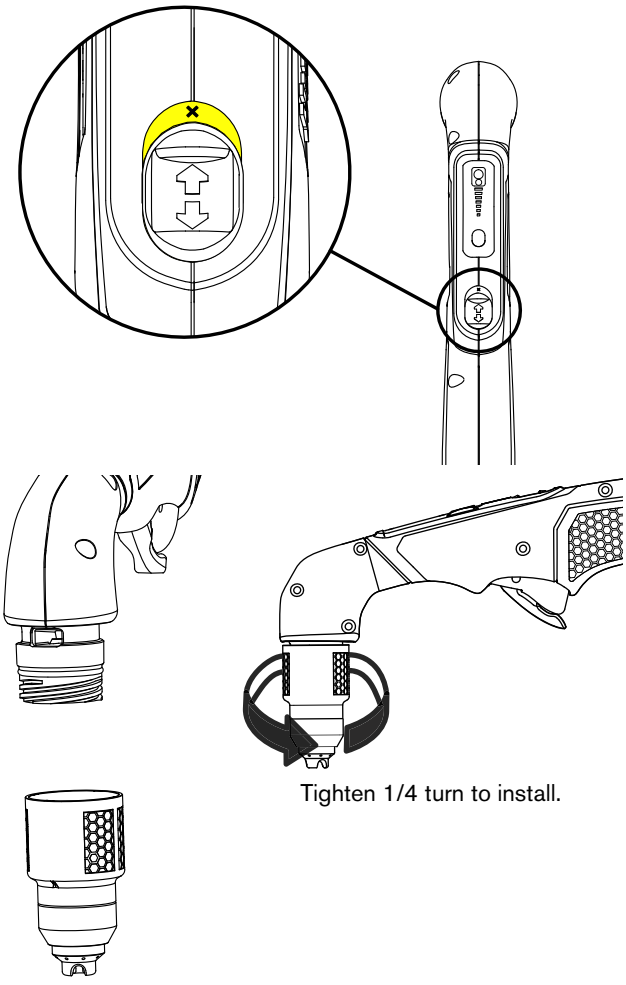

Step 4 – Set the power switch to ON (I)

Set the power switch to ON (**I**). The switch is on the rear panel of the plasma power supply.

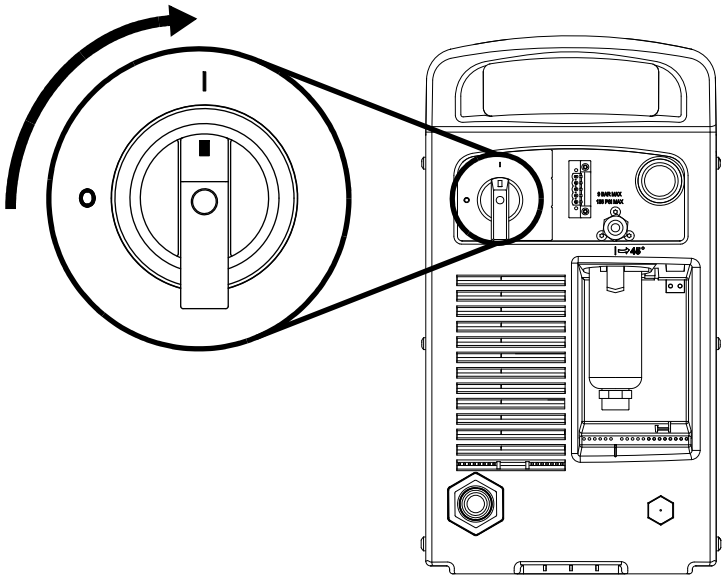

- If the torch-lock switch is set to the green “ready to fire” (✔) position when you set the power switch to ON, the hand torch puts out a puff of air. Refer to Warning puffs of air (hand torches) on page 68.
- If the torch-lock switch is set to the yellow lock (**X**) position when you set the power switch to ON, the 0-50-0 or 0-50-1 fault code and Torch Cap Sensor icon show on the status screen. Refer to Fault code and LED behavior on page 69.

Step 5 – Unlock the SmartSYNC torch

1. Move the torch-lock switch to the green “ready to fire” (✓) position.
2. **Hand torch:** Pull the torch trigger 1 time to get the warning puffs of air.

   Machine torch: Send a START / STOP command from the CNC to fire a plasma arc. There are no warning puffs of air.
3. **Hand torch:** When the warning puffs of air stop, the torch is prepared to fire a plasma arc.

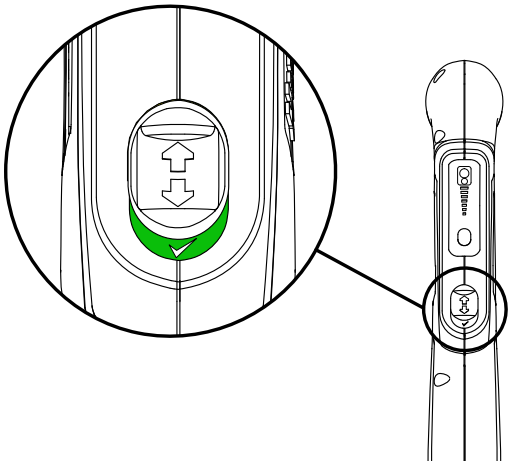

If you see a fault code and fault icon on the status screen, remove the fault condition before you continue. Refer to Fault codes on page 132.

Warning puffs of air (hand torches)

The following happens on SmartSYNC hand torches the first time that you try to fire the torch after moving the torch-lock switch to the yellow lock (**X**) position and then back to the green “ready to fire” (✓) position:

1. The plasma arc does not fire.
2. The torch quickly puts out multiple puffs of air. You can feel a light tap in the torch handle with each puff of air.
3. The plasma power supply makes a pressure-release sound that you can hear with each puff of air.

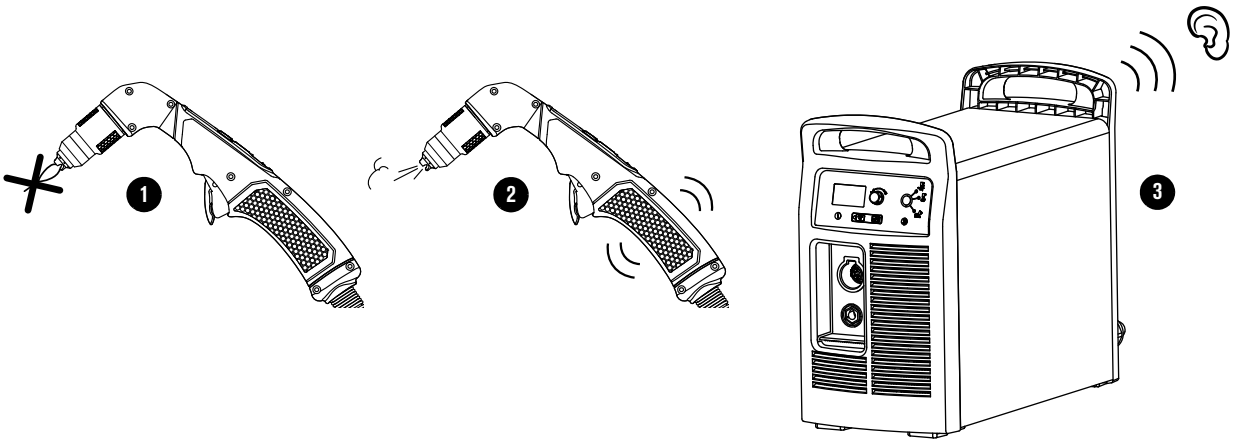

This feedback is a warning. It does not identify a fault condition. **It tells you that the torch is unlocked and will fire a plasma arc the next time that you pull the trigger.**

Fault code and LED behavior

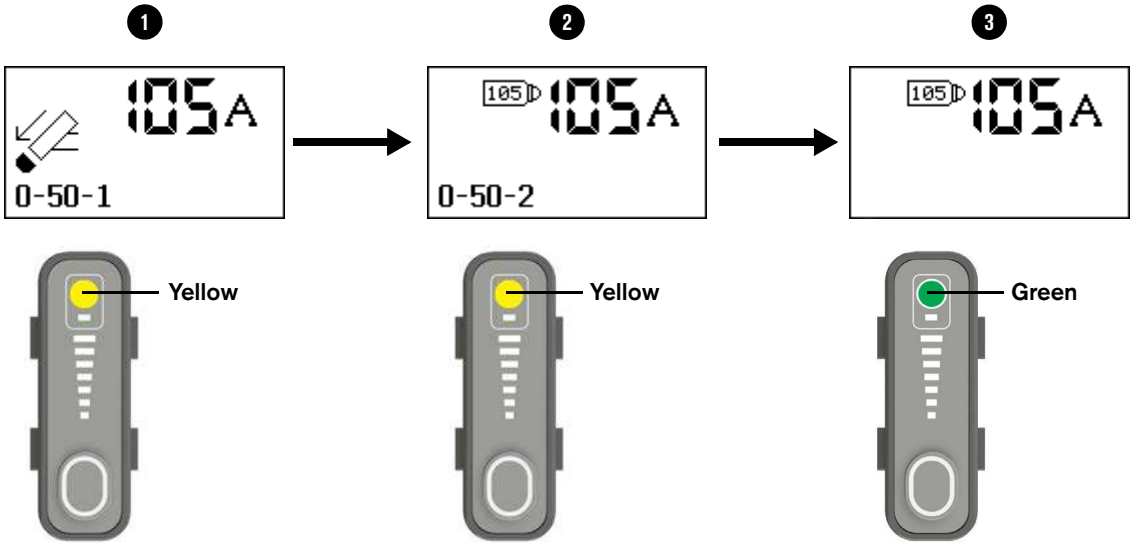

On the plasma power supply:

1. When you set the torch-lock switch to the yellow lock (**X**) position while the plasma power supply stays ON, the Fault light-emitting diode (LED) comes on and the **0-50-1** fault code and Torch Cap Sensor icon show.
2. After you install the cartridge and set the torch-lock switch to the green “ready to fire” (✓) position, the Fault LED goes off and the fault code changes to **0-50-2**.
3. **Hand torch:** After the torch puts out the warning puffs of air, the 0-50-2 fault code goes off.
   Machine torch: The 0-50-2 fault code shows for approximately 1 second and then goes off.

When you start the plasma power supply while the torch-lock switch is in the yellow lock (**X**) position, the system shows the **0-50-0** fault code instead of **0-50-1**. Move the torch-lock switch to the green “ready to fire” (✓) position to continue.

On the SmartSYNC hand torch:

1. When you set the torch-lock switch to the yellow lock (**X**) position while the plasma power supply stays ON, the LED on the hand torch changes from green to **yellow**.
2. When you install the Hypertherm cartridge and set the torch-lock switch to the green “ready to fire” (✓) position, the LED on the hand torch stays **yellow**.
3. After the torch puts out the warning puffs of air, the LED changes from yellow to **green**.

Step 6 – Adjust the output current (A) and operating mode if necessary

1. Make sure that the **output current (A)** is correct for your application.
   - ❑ The plasma power supply automatically sets the output current related to the type of Hypertherm cartridge that you install. For example, when you install a 65 A Hypertherm cartridge, the plasma power supply sets the output current to 65 A.
   - ❑ Turn the adjustment knob as necessary to set the output current in increments of 1 A. You can also use the hand torch to set the output current. Refer to page 71.

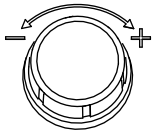

   - ❑ Move the torch-lock switch to the green “ready to fire” (✔) position before you adjust the output current.

   When you adjust the current, a scale identifies the lowest and highest possible amperage setting related to the plasma power supply and Hypertherm cartridge.

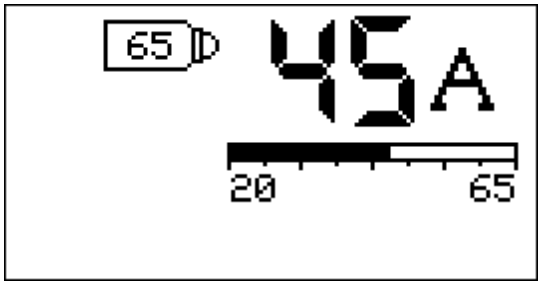

2. Make sure that the **operating mode** is correct for your application.
   - ❑ The plasma power supply automatically sets the operating mode related to the type of Hypertherm cartridge that you install.
     - When you install a Hypertherm cutting cartridge, the plasma power supply goes to Cut mode. Gouge mode is not available.
     - When you install a Hypertherm gouging cartridge, the plasma power supply goes to Gouge mode. Cut mode and Expanded Metal mode are not available.
   - ❑ You can adjust the operating mode manually if necessary. Refer to page 75. Move the torch-lock switch to the green “ready to fire” (✔) position before you set the operating mode.
   - ❑ The plasma power supply also automatically sets the gas pressure for optimum cutting related to the operating mode, the torch type, the Hypertherm cartridge type, and the length of the torch lead.

Step 7 – Use the SmartSYNC torch

Use the hand torch

Use the methods in the following sections to cut and gouge correctly:

- Cut with the Hand Torch on page 93
- Gouge with the Hand Torch on page 111

Adjust the amperage from the hand torch

The plasma power supply automatically sets the output current (A) related to the type of Hypertherm cartridge that you install. For example, when you install a 65 A Hypertherm cartridge, the plasma power supply sets the output current to 65 A.

If necessary, you can adjust the output current (A) from the SmartSYNC hand torch.

Push the button on the amperage -adjustment control to move the current setting from one preset amperage to another.

The amperage for each setting changes related to the Hypertherm cartridge and plasma power supply that you are using. Refer to Amperage settings by plasma power supply and cartridge on page 72.

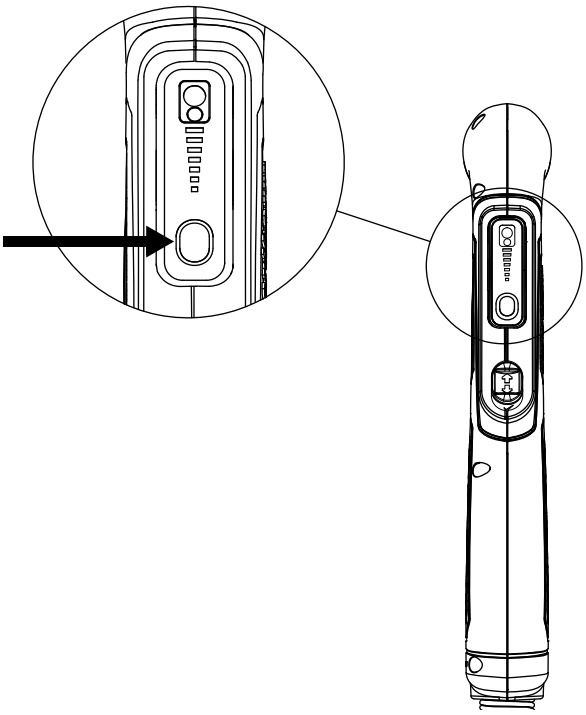

Amperage settings by plasma power supply and cartridge

Powermax65 SYNC

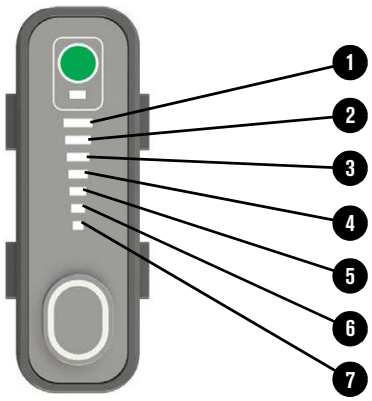

Cartridge type	
45 A	**65 A**
45 A	65 A
35 A	60 A
25 A	55 A
20 A	45 A
	35 A
	25 A
	20 A

Powermax85 SYNC

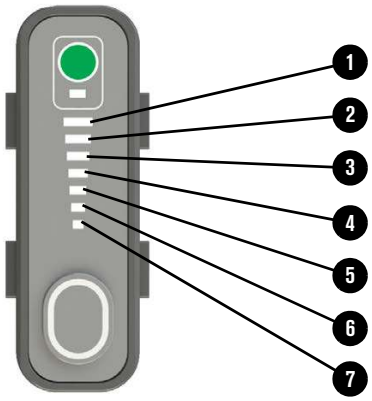

Cartridge type		
45 A	**65 A**	**85 A**
45 A	65 A	85 A
35 A	55 A	75 A
30 A	50 A	65 A
25 A	45 A	55 A
	35 A	45 A
	25 A	35 A
		25 A

Powermax105 SYNC

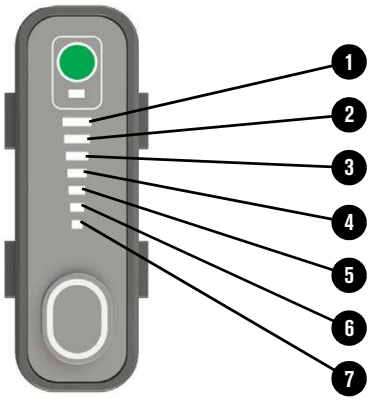

Cartridge type			
45 A	**65 A**	**85 A**	**105 A**
45 A	65 A	85 A	105 A
35 A	55 A	75 A	95 A
30 A	50 A	65 A	85 A
	45 A	55 A	65 A
	35 A	45 A	55 A
	30 A	35 A	45 A
		30 A	30 A

Use the machine torch

Use the methods in the *Powermax65/85/105 SYNC Mechanized Cutting Guide* (810480) to cut and gouge correctly.

What occurs during and after cutting

Temperature control

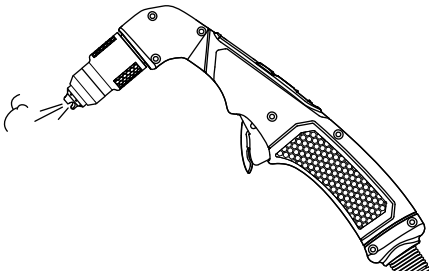

Postflow – After you complete a cut and release the torch trigger, air continues to flow from the torch to decrease the temperature of the cartridge. This is referred to as *postflow*.

Always let postflow complete before you remove a cartridge.

Fan activity – The cooling fan inside the plasma power supply automatically comes on as necessary during and after cutting to decrease the temperature of internal components.

Hand torch LED behavior

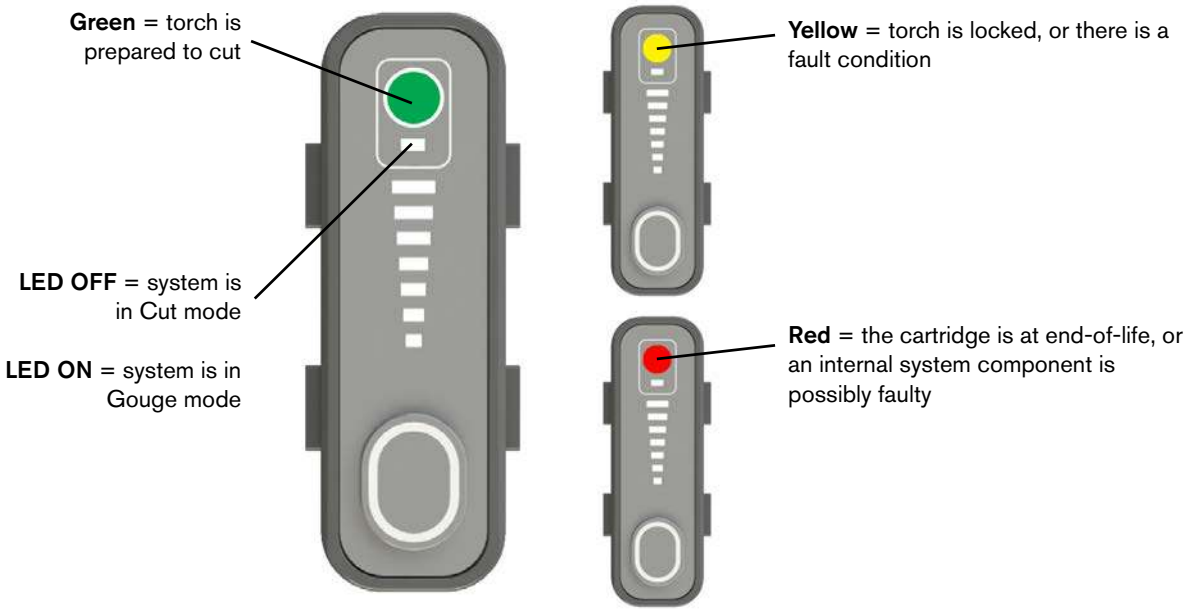

Adjust the gas pressure manually

In **automatic gas pressure mode**, the plasma power supply automatically sets the gas pressure for optimum cutting related to the operating mode, the torch type, the Hypertherm cartridge type, and the length of the torch lead. But if it is necessary to adjust the gas pressure for a specific application, you can use **manual gas pressure mode** to do so.

Manual gas pressure mode must be used only by experienced operators.

1. Move the torch-lock switch to the green “ready to fire” (✔) position.
2. Push and hold ○ until the green LED next to the button comes on to go into **manual gas pressure mode** (approximately 2 seconds).
3. If necessary, push A/ until the selection cursor points to the gas pressure setting.
4. Turn the adjustment knob to adjust the gas pressure to the necessary level. The arrow next to the pressure bar ❶ moves up and down as you adjust the pressure.

   In many conditions, you can increase and decrease the gas pressure a maximum of 0.7 bar (10 psi). The acceptable range can change if the cartridge you are using has a smaller limit. If the bottom of the vertical bar is shaded, as shown to the right, the system does not let you decrease the gas pressure below the top of the shaded area.

.

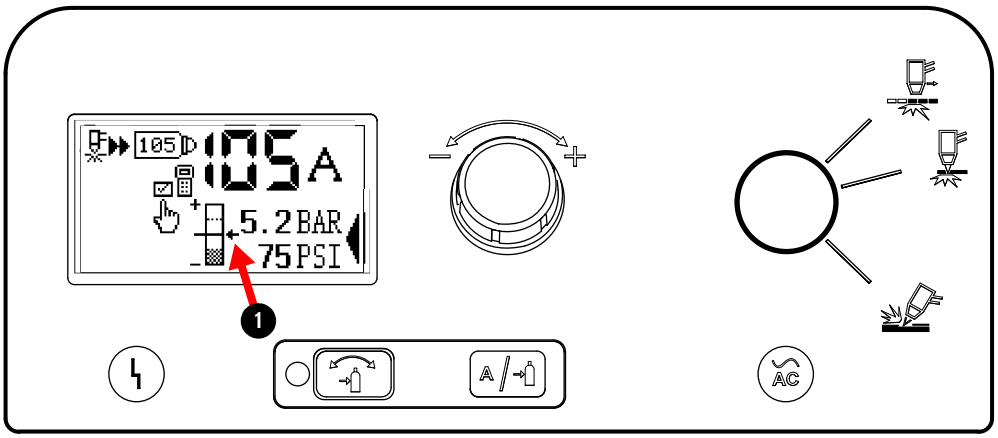

Go back to automatic gas pressure mode

To go back to **automatic gas pressure mode**, push ○. The LED next to the button goes off. The system also goes back to automatic gas pressure mode when you install a different type of cartridge.

- When you change **from manual gas pressure mode to automatic gas pressure mode**, the plasma power supply automatically sets the gas pressure related to the Hypertherm cartridge, but the amperage setting stays the same.
- When you change **from automatic gas pressure mode to manual gas pressure mode**, the plasma power supply uses the last manual gas pressure that you set, and the amperage setting stays the same.
- When you do a **quick restart or a cold restart of the plasma power supply in manual gas pressure mode**, the plasma power supply keeps the last manual gas pressure and amperage that you set unless you install a different type of cartridge.

Adjust the operating mode manually

The plasma power supply automatically sets the operating mode related to the type of Hypertherm cartridge that you install.

- When you install a Hypertherm cutting cartridge or FineCut cartridge, the plasma power supply goes to **Cut mode**.
  - ❑ Push the button to move from Cut mode to Expanded Metal mode.
    - Move the torch-lock switch to the green “ready to fire” (✔) position before you set the operating mode.
  - ❑ Gouge mode is not available.

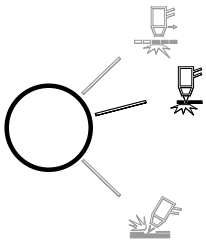

- When you install a Hypertherm gouging cartridge, the plasma power supply goes to **Gouge** mode.
  - ❑ Cut mode and Expanded Metal mode are not available.

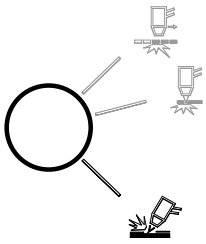

Cut expanded metal

Expanded metal has a slotted or mesh pattern. Cutting expanded metal causes cartridges to wear more quickly because a continuous pilot arc is necessary. A pilot arc occurs when the torch is fired but the plasma arc is not in contact with the workpiece.

Do these steps to cut expanded metal:

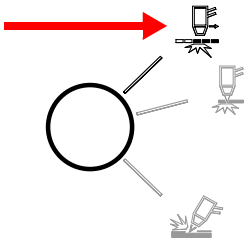

1. Install a Hypertherm cutting cartridge or FineCut cartridge.
2. Move the torch-lock switch to the green “ready to fire” (✓) position.
3. Push the button to move from Cut mode to Expanded Metal mode.

Go back to automatic setting of the operating mode

- When you manually set the operating mode, the plasma power supply keeps that setting until you install a different type of Hypertherm cartridge or you install a different torch.
  - Do not set the operating mode when the torch-lock switch is in the yellow lock (**X**) position. When you unlock the torch, the plasma power supply automatically sets the operating mode to match the type of cartridge installed.
- If you manually set the operating mode and then replace the Hypertherm cartridge with a new cartridge of the same type, the plasma power supply keeps the operating mode that you set.
  - The plasma power supply also keeps your setting if you do a quick restart or a cold restart.

A *type* of Hypertherm cartridge refers to the amperage of the cartridge and to its application, such as gouging, standard drag-cutting, FineCut, or mechanized. Each *type* of Hypertherm cartridge has a different part number.

Monitor cartridge data

Monitor data for individual cartridges

Each Hypertherm cartridge contains data about how it has been used. You can monitor this data if necessary. For example, you can compare data between Hypertherm cartridges if one cartridge had significantly better life than another cartridge, or if you want to calculate the average cartridge life over a period of time.

You can also use the Hypertherm cartridge reader accessory to monitor Hypertherm cartridge use. Refer to the *Powermax65/85/105 SYNC Hypertherm Cartridge for Powermax SYNC Reader and Dashboard User Guide* (811460).

To see this information, go to the Cartridge Data screen (**CARTRIDGE DATA 1**):

1. Push and hold [A/⊸] for 2 seconds to go to the main menu screen.
2. Turn the adjustment knob to go to [chart] 1. Push [A/⊸] to select it.
3. Turn the adjustment knob to go to [H] 1, and push [A/⊸] to select it. The Cartridge Data screen (**CARTRIDGE DATA 1**) shows.
4. When you are done, push the [⊸] button to go back to the status screen.

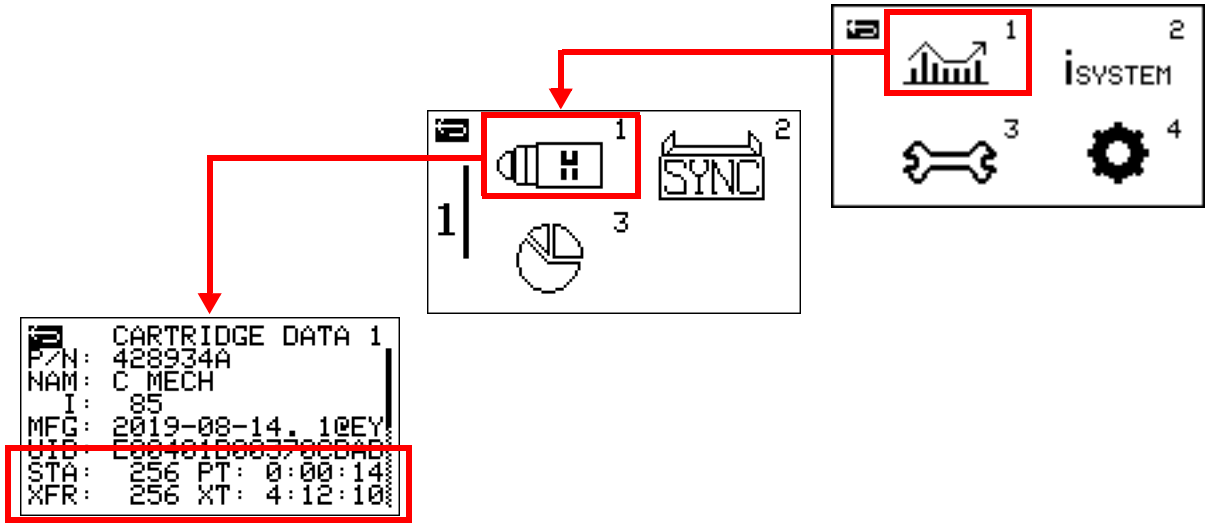

The following fields show the use data for the installed Hypertherm cartridge:

STA – This field shows the total number of pilot arc starts that the Hypertherm cartridge has done in its life.

XFR – This field shows the total number of arc transfers that the Hypertherm cartridge has done in its life.

PT – This field shows the cumulative pilot arc time that the Hypertherm cartridge has had in its life, in hours (HH), minutes (MM), and seconds (SS): *HH:MM:SS*.

XT – This field shows the cumulative arc transfer time that the Hypertherm cartridge has had in its life, in hours (HH), minutes (MM), and seconds (SS): *HH:MM:SS*.

You can see this same data for the life of the plasma power supply. Refer to Power Supply Data screen on page 162.

Show cartridge data on the status screen

You can show the cartridge data for pilot arc starts (**STA**) and arc transfer time (**XT**) on the status screen. When you set the **STA/XT** field to on, these values stay on the status screen until you set the **STA/XT** field to off.

1. Push and hold [A/⇥] for 2 seconds to go to the main menu screen.
2. Turn the adjustment knob to go to ⚙ 4. Push [A/⇥] to select it.
3. Turn the adjustment knob to go to ☼◑ 1, and push [A/⇥] to select it. The LCD Display screen (**LCD DISPLAY**) shows.

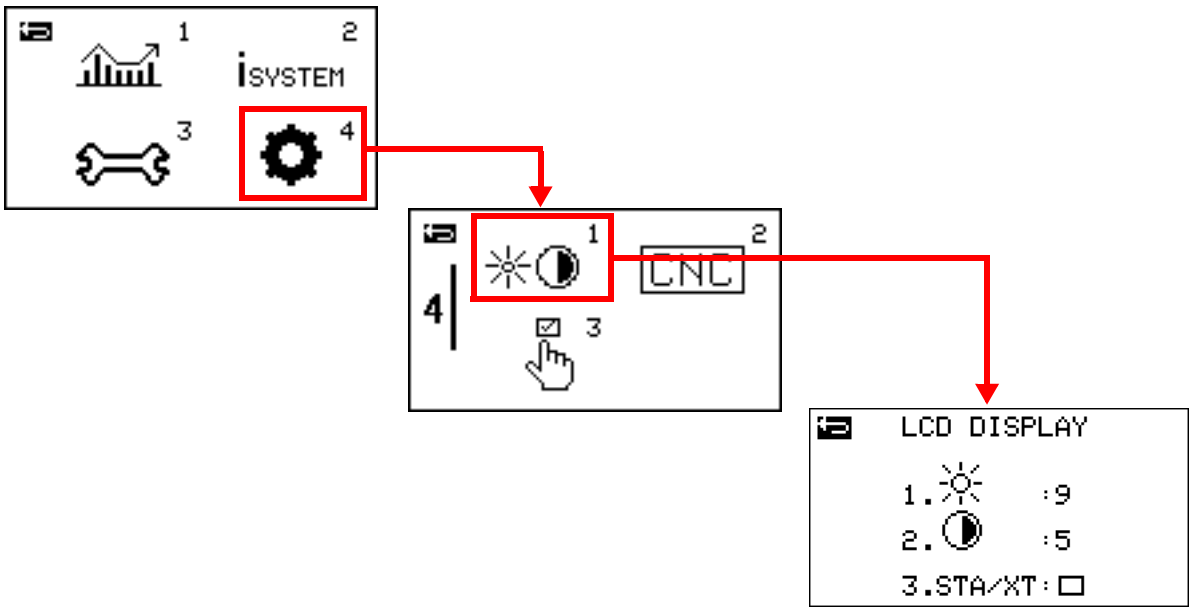

4. Turn the adjustment knob to go to the **STA/XT** field, and push [A/⇥] to select it.

5. Turn the adjustment knob to set the **STA/XT** field to on: ☑ .

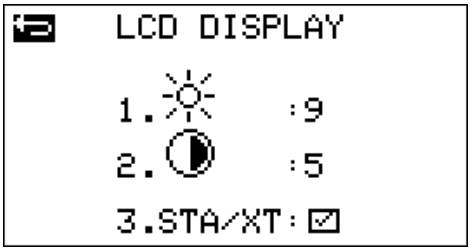

6. Push A/→⌂ to apply the setting.

7. Push ○ to go back to the status screen. The **STA** and **XT** fields now show on the screen.

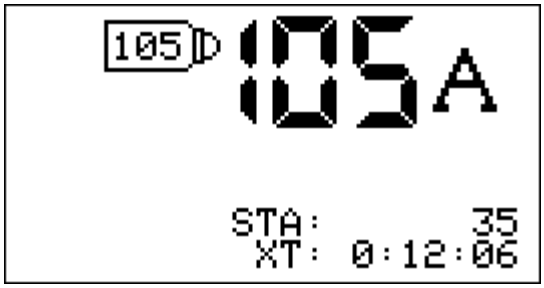

When to replace the cartridge (fault code 0-32-*n*)

The system has a cartridge end-of-life detection feature that tells you when to install a new Hypertherm cartridge. This feature helps to prevent damage to the torch. You can choose to replace the cartridge before it gets to this condition if the cut quality is no longer satisfactory. Refer to Get the most out of your cartridges on page 106.

When it is necessary to replace a cartridge, replace the full cartridge with a new one. Do not try to disassemble the cartridge. No maintenance is necessary on the cartridge except possibly to remove molten metal from the tip of the cartridge.

The 0-32-0 and 0-32-1 fault codes identify the cartridge end-of-life condition, as follows:

- The **0-32-0** fault code shows when the system first senses that the Hypertherm cartridge is at end-of-life. The LED on the hand torch also changes to red. To remove the fault code, install a new cartridge.
  - If you restart the system and try to use the same cartridge, the **0-32-1** fault code shows to remind you that the cartridge is at end-of-life. The LED on the hand torch also flashes yellow. **Hypertherm strongly recommends that you install a new cartridge.**
  - If you continue to try to cut with a cartridge that is in an end-of-life condition, the 0-32-0 fault code shows again and stops the torch from firing.

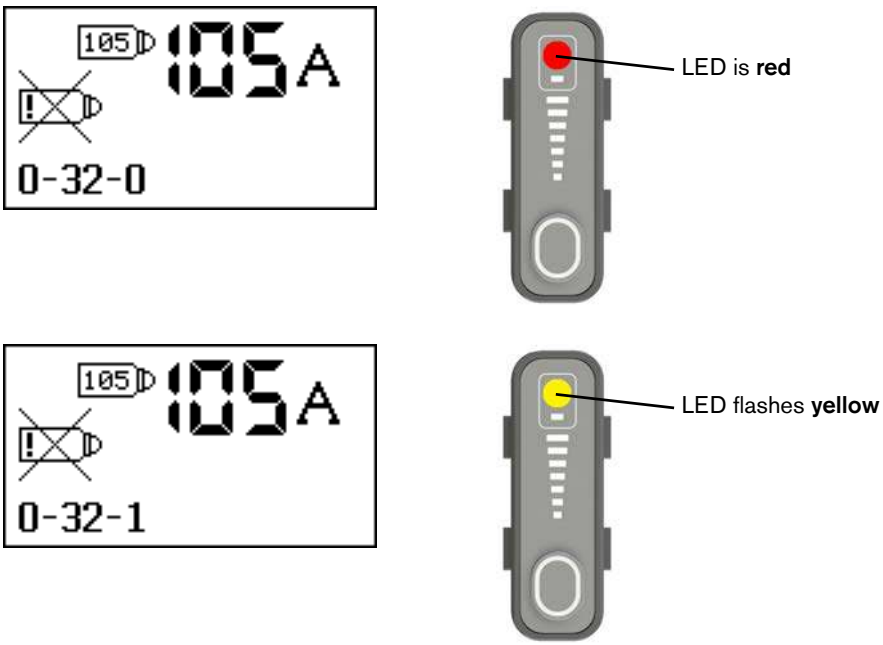

Conditions when cartridge end-of-life detection is disabled

The plasma power supply temporarily disables the Hypertherm cartridge end-of-life detection feature when one of the following conditions occurs:

- You install a FineCut hand cutting cartridge.
- You set the output current below 40 A for any type of Hypertherm cartridge.

Prevent overheating

The duty cycle ratings help you to know how to operate a Powermax system without overheating it.

Duty cycle – Percentage of time during a 10-minute interval that a plasma arc can stay on without causing the plasma power supply to overheat.

For a complete list of duty cycle specifications for all of the plasma power supply configurations, refer to the following sections:

- **Powermax65 SYNC:** Refer to Powermax65 SYNC on page 22.
- **Powermax85 SYNC:** Refer to Powermax85 SYNC on page 24.
- **Powermax105 SYNC:** Refer to Powermax105 SYNC on page 26.

Table 14 – Duty cycle example for a Powermax65 SYNC

Output current	Duty cycle*
Powermax65 SYNC	
65 A	50%
46 A	100%

* Assumes ambient operating temperature of 40°C (104°F).

If you cut for more than the recommended duty cycle and the plasma power supply overheats, the following occurs:

- The plasma arc stops.
- The temperature fault icon comes on.
- The cooling fan inside the plasma power supply continues to operate.

When the plasma power supply overheats, do the following:

- Leave the plasma power supply on to let the fan cool the plasma power supply.
- Wait for the temperature fault icon to go off before you start to cut again.

Decrease arc stretch

Stretching the plasma arc for long periods decreases the duty cycle. Whenever possible, drag the torch on the workpiece. Refer to Start a cut from the edge of the workpiece on page 98.

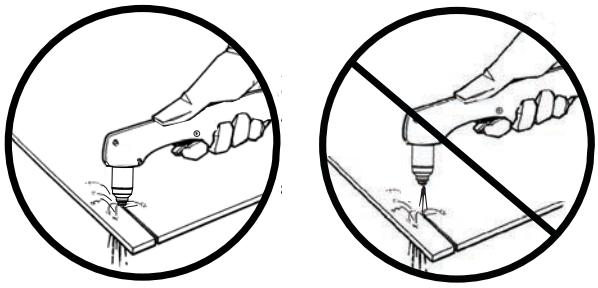

If you operate the plasma power supply on a lower rated electrical service, stretching the plasma arc for long periods can cause the plasma power supply to overheat more quickly and can cause the circuit breaker to open (trip).

Adjust brightness and contrast

Do the following to adjust the brightness and contrast of the liquid-crystal display (LCD) screen:

1. Push and hold [A/⇥] for 2 seconds to go to the main menu screen.

2. Turn the adjustment knob to go to ⚙ [4]. Push [A/⇥] to select it.

3. Turn the adjustment knob to go to ☼◑ [1], and push [A/⇥] to select it. The LCD Display screen (**LCD DISPLAY**) shows.

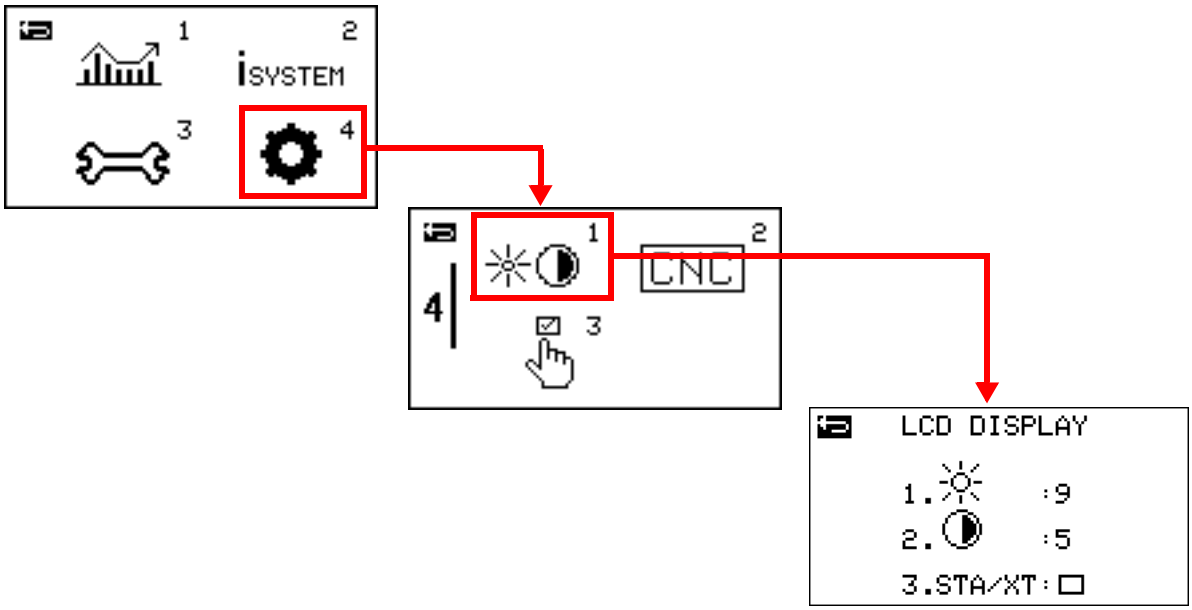

4. Turn the adjustment knob to adjust the value in the ☼ field to increase or decrease the **brightness** of the LCD screen.

   Push [A/⇥] to enter the value.

   - 0 = Darkest setting
   - 9 = Brightest setting

5. Adjust the value in the ◑ field to increase or decrease the **contrast** of the LCD screen.

   - 0 = Lowest contrast
   - 9 = Highest contrast

When you are done, push the [↺] button to go back to the status screen.

Controls and indicators on the plasma power supply

Cutting controls

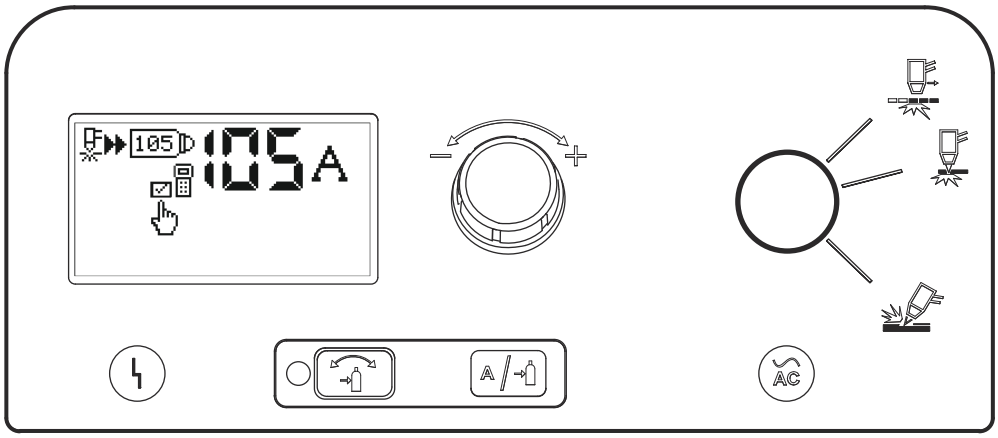

Status screen – By default, this screen shows system status information. It also shows fault codes and fault icons when faults occur.

In different modes, this screen changes to show different kinds of information about the plasma power supply, SmartSYNC torch, and Hypertherm cartridge.

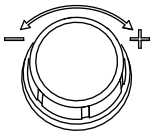

Adjustment knob – Turn this knob to adjust the output current in increments of 1 A.

You can also use this knob to increase or decrease the gas pressure. Refer to Adjust the gas pressure manually on page 74.

Fault LED (yellow) – When this LED is on, it shows that there is a fault condition with the plasma power supply.

This LED also comes on when the torch is set to the yellow lock (**X**) position. Refer to page 65.

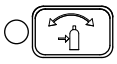

Automatic / manual gas pressure setting mode selector – Push and hold this button until the green LED comes on to go into **manual gas pressure mode** (approximately 2 seconds). Push the button again to go back to **automatic gas pressure mode**. Refer to page 75.

Manual gas pressure mode must be used only by experienced operators.

In some conditions, you can push this button to immediately go from the screen that you are on to the status screen.

Amperage / gas selector – Push this button in manual gas pressure mode to select amperage or gas pressure for manual adjustments.

The selection cursor identifies whether amperage or gas pressure is selected.

You can also push and hold this button for 2 seconds to go to the main menu screen. Refer to page 88.

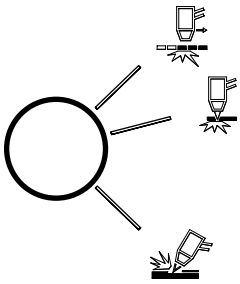

Operating mode button – The plasma power supply automatically sets the mode to Cut mode or Gouge mode related to the type of Hypertherm cartridge that you install. With a Hypertherm cutting cartridge installed, you can push this button to change from Cut mode to Expanded Metal mode. Refer to page 75 for more information.

When you install a Hypertherm gouging cartridge, Cut mode and Expanded Metal mode are not available. When you install a Hypertherm cutting cartridge, Gouge mode is not available.

Expanded Metal mode. Use this mode with a Hypertherm cutting cartridge to cut expanded metal with a continuous pilot arc. Refer to page 76.

Cut mode. Use this mode with a Hypertherm cutting cartridge for most cutting and piercing applications.

Gouge mode. Use this mode with a Hypertherm gouging cartridge for gouging applications.

You can also use this button to go into gas test mode. Refer to page 151.

Power ON LED (green) – When this LED is on, it shows that the power switch is set to ON (**I**) and the plasma power supply is prepared to cut.

If the LED flashes, this identifies a fault condition. Refer to Fault codes on page 132.

Status screen

By default the status screen shows system status information.

Torch started – This icon shows that the torch has received a start signal and has started a pilot arc.

Torch is transferring – This icon shows that the plasma arc transferred to the workpiece and the torch is cutting or gouging.

System process – This icon shows the maximum output current (A) of the Hypertherm cartridge.

If there are no cartridge communications with the plasma power supply, this icon does not show on the status screen.

Current setting (amperage) – This is the current at which the plasma power supply will cut or gouge, in amperage.

Use either the adjustment knob on the plasma power supply or the amperage-adjustment control on the hand torch to change the output current. Installing a Hypertherm cartridge of a different amperage also changes the current setting.

Non-default configuration – This icon shows that at least one default system setting has been changed.

Remote control – This icon shows that a CNC or other controller is controlling the plasma power supply. The front panel controls are disabled during remote mode operation. But fault codes and fault icons still show as they would otherwise, and you can go to the menu screens to see information about the plasma power supply, torch, and cartridge.

Cartridge data – These fields show the total number of pilot arc starts (**STA**) and the cumulative plasma arc transfer time (**XT**) for the life of the Hypertherm cartridge that is installed on the torch. These fields do not show by default. Refer to page 78.

Gas pressure indicators

For instructions on how to manually change the gas pressure, refer to page 74.

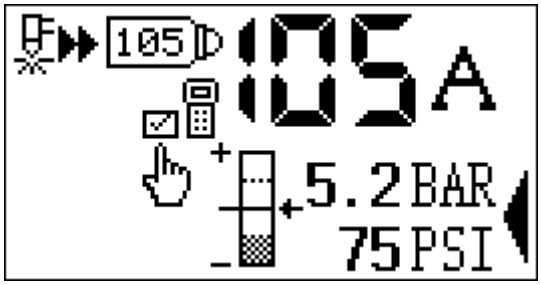

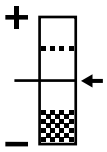

Gas pressure bar – This icon shows a visual indicator of the gas pressure when you are in manual gas pressure mode.

The midpoint of the vertical bar identifies the automatic pressure setting that is set by the plasma power supply. The arrow shows the manual pressure setting, as follows:

- When you increase (+) the gas pressure from the set value, the arrow goes above the midpoint.
- When you decrease (-) the gas pressure from the set value, the arrow goes below the midpoint.

5.2BAR
75PSI

Gas pressure setting – The gas pressure shows in bar and psi when you are in manual gas pressure mode.

Selection cursor – This icon shows whether amperage or gas pressure is selected when you are in manual gas pressure mode.

Fault codes and fault icons

When a fault occurs with the plasma power supply or the torch, a fault code ❶ and related fault icon ❷ show on the status screen. For information on what each fault code means and how to remove it, refer to Fault codes on page 132.

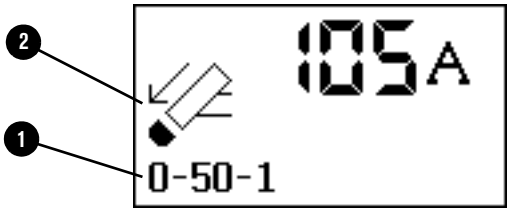

Main menu screen

Use the main menu screen to go to the 4 submenu screens. Use the submenu screens to see information about the plasma power supply, torch, and Hypertherm cartridge, and to change system settings.

1. To go to the main menu screen, push and hold [A/⇥] for 2 seconds.
2. Turn the adjustment knob to go to an icon on the screen.
3. Push [A/⇥] to select the icon.

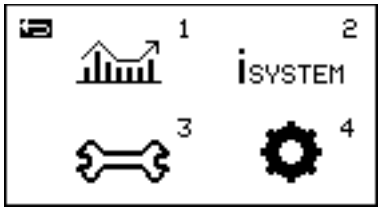

1 **Cartridge and plasma power supply data –** Select this icon to go to use data and other information about the Hypertherm cartridge and the plasma power supply. Refer to page 89.

iSYSTEM 2 **System information –** Select this icon to go to service-related information about printed circuit boards (PCBs) in the plasma power supply and in the SmartSYNC torch. Refer to page 90.

3 **Service –** Select this icon to go to service-related information about fault codes, radio frequency (RF) settings and logs, and cut counter transfers. Refer to page 91.

4 **Settings –** Select this icon to go to system settings that you can change, such as the brightness and contrast of the LCD screen. Refer to page 92.

Back – Select this icon to go back to the screen you were on before.

Tip: Push the [⇥] button to immediately go back to the status screen.

Cartridge and Power Supply Data submenu

To go to the Cartridge and Power Supply Data submenu, select 1 on the main menu screen.

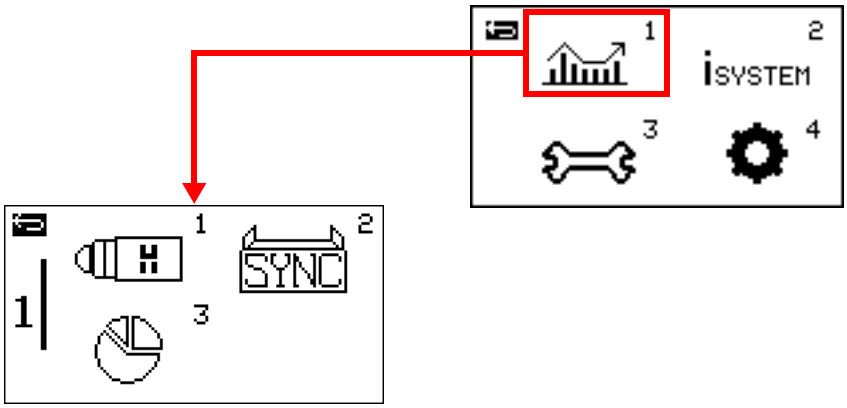

1 **Cartridge data –** Select this icon to see data about the Hypertherm cartridge that is installed on the torch. Refer to Monitor cartridge data on page 77.

2 **Plasma power supply data –** Select this icon to see data about plasma power supply use and performance. Refer to Power Supply Data screen on page 162.

3 **Cartridge history –** Select this icon to see cumulative cartridge start data for the life of the plasma power supply. Refer to Cartridge History screen on page 164.

Back – Select this icon to go back to the main menu screen.

Tip: Push the button to immediately go back to the status screen.

System Information submenu

To go to the System Information submenu, select iSYSTEM 2 on the main menu screen.

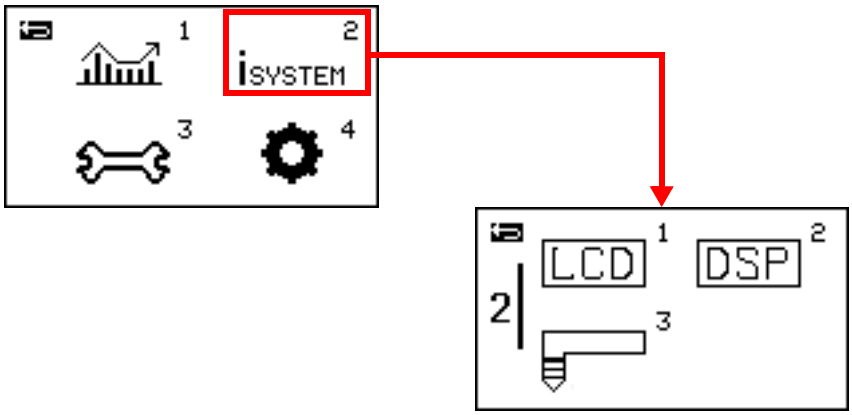

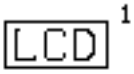

1

LCD/control PCB information – Select this icon to see service-related information about the firmware on the plasma power supply's LCD/control PCB.

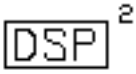

2

DSP and power PCB information – Select this icon to see service-related information about the plasma power supply's power PCB and the firmware on the DSP PCB.

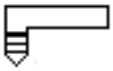
3

Torch information – Select this icon to see service-related information about the SmartSYNC torch that is connected to the plasma power supply. Refer to Torch PCB Information screen on page 167.

Back – Select this icon to go back to the main menu screen.

Tip: Push the ○ button to immediately go back to the status screen.

Service Information submenu

To go to the Service Information submenu, select 3 on the main menu screen.

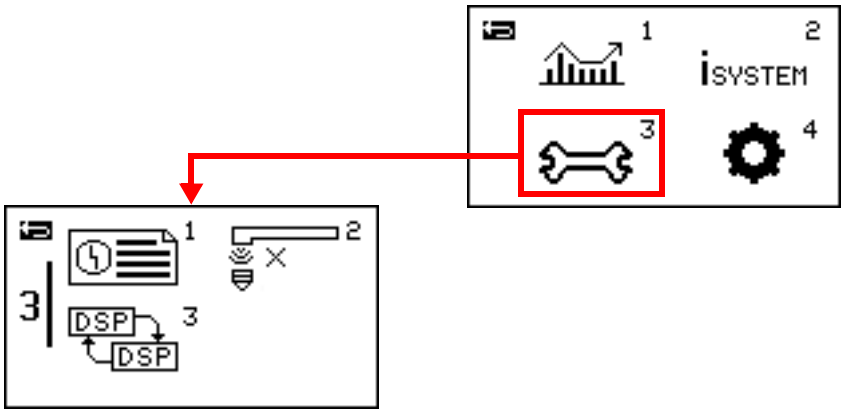

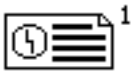

Power supply fault log – Select this icon to see the 10 most recent fault codes that have occurred on the plasma power supply. Refer to See recent fault codes (Power Supply Log screen) on page 150.

The plasma power supply does not show operational fault codes (0-*nn*-*n*) on this screen.

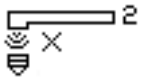

Radio frequency information – Select this icon to see service-related information about radio frequency (RF) settings and logs. This information is for qualified service technicians.

Cut counters transfer – Select this icon to do a transfer of cut counter data before installing a new DSP PCB. This feature is for qualified service technicians.

Back – Select this icon to go back to the main menu screen.

Tip: Push the button to immediately go back to the status screen.

System Settings submenu

To go to the System Settings submenu, select 4 on the main menu screen.

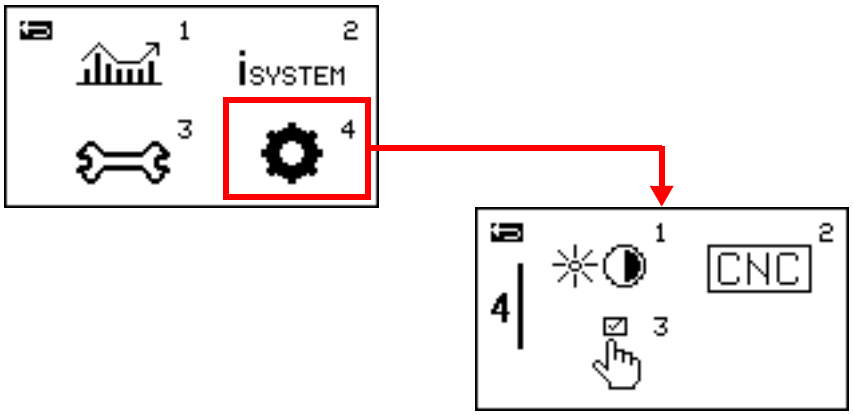

1 **Brightness and contrast –** Select this icon to adjust the brightness and contrast of the LCD screen or to show cartridge data on the status screen. Refer to Adjust brightness and contrast on page 83 or Show cartridge data on the status screen on page 78.

2 **CNC interface settings –** Select this icon to see the node address given to this Powermax plasma power supply (if applicable). Refer to CNC Interface Settings screen on page 170.

3 **System configuration settings –** Select this icon to set system features to on or off, such as the low gas pressure detection feature. Refer to Adjust system settings on the Feature Configuration screen on page 153.

Back – Select this icon to go back to the main menu screen.

Tip: Push the button to immediately go back to the status screen.

4 Cut with the Hand Torch

This section gives an overview of hand torch parts, dimensions, cartridges, cutting guidelines, and basic cutting methods.

- For gouging information, refer to Gouge with the Hand Torch on page 111.
- To correct problems with cut quality, refer to Common problems on page 123.

About the hand torch

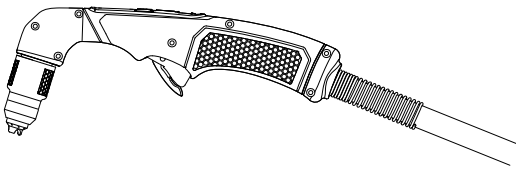

SmartSYNC hand torches come in 75° and 15° models.

- The 75° hand torch is a general purpose torch designed for the widest range of applications.
- The 15° hand torch is designed to point heat away from the operator during heavy gouging. It also makes it easier to cut overhead or in areas that are not easy to reach.

SmartSYNC hand torch features include the following:

- A control on the torch that lets you adjust the output current (A) from the torch (refer to Adjust the amperage from the hand torch on page 71)
- Automatic setting of operating mode, amperage, and gas pressure related to the Hypertherm cartridge that you install, the torch type, and the torch lead length
- Communication of cartridge information to the plasma power supply, including cartridge end-of-life detection (refer to Cartridge Data screen on page 160 and Power Supply Data screen on page 162)
- A torch-lock switch that prevents the torch from firing accidentally, even when the plasma power supply is ON (refer to Step 5 – Unlock the SmartSYNC torch on page 68)
- The FastConnect quick-disconnect system that lets you easily remove the torch to move the system or to change from one torch to another

For information about the thicknesses you can cut and pierce with a SmartSYNC hand torch, refer to Cutting specifications on page 33.

Select the correct cutting cartridge

Hypertherm offers the following types of hand-cutting cartridges, which can be used with both the 15° and the 75° SmartSYNC hand torches:

Cartridge Type	Purpose
Drag-cutting (yellow)	Use these cartridges to drag the torch on the workpiece (drag-cut) for the widest range of cutting applications.
FineCut® hand (yellow)	Use these cartridges to get a narrower kerf on thin mild steel and stainless steel up to 3 mm (10 gauge).
FlushCut™ (black)	Use these cartridges to remove lugs, bolts, pad eyes, and other attachments without piercing or damaging the workpiece below.

- For a full list of the cutting and gouging cartridges available, refer to the *Powermax65/85/105 SYNC Parts Guide* (810490).
- If your preference is to keep a standoff while cutting, you can use the gray mechanized cutting cartridges on your SmartSYNC hand torch.
- For information on gouging processes and cartridges, refer to Gouge with the Hand Torch on page 111.
- Plasma power supplies are shipped with a starter set of Hypertherm cartridges.

For help installing the cartridge, refer to Step 3 – Install the cartridge on page 64.

Prepare to fire the torch

⚠ WARNING

INSTANT-ON TORCHES – PLASMA ARC CAN CAUSE INJURY, BURNS

Ignition of the plasma arc occurs immediately when you pull the torch trigger. Before changing the cartridge, one of the following steps is necessary. Whenever possible, complete the first step.

- Set the power switch on the plasma power supply to OFF (**O**).

  OR

- Move the torch-lock switch to the yellow lock (**X**) position. Pull the trigger to make sure that the torch does not fire a plasma arc.

⚠ WARNING

INSTANT-ON TORCHES – STAY CLEAR OF PLASMA ARC

The plasma arc will cut quickly through gloves and skin.

- Put on correct and approved protective equipment.
- Keep hands, clothing, and objects away from the torch tip.
- Do not hold the workpiece. Keep your hands clear of the cutting path.
- Never point the torch toward yourself or others.

⚠ WARNING

RISK OF BURNS AND ELECTRIC SHOCK – USE INSULATED GLOVES

Always put on insulated gloves when changing the cartridges. The cartridges get very hot during cutting and can cause severe burns.

Touching the cartridges can also cause electric shock if the plasma power supply is ON and the torch-lock switch is not in the yellow lock (**X**) position.

To prevent accidental firing, the hand torch has a torch-lock switch and a safety trigger. To fire the torch, do the following:

1. Install the correct cartridge. Refer to Step 3 – Install the cartridge on page 64.

   When you install a Hypertherm cutting cartridge, the system goes to **Cut mode**.

   - To change the mode from Cut mode to Expanded Metal mode, push the button.

   When you install a cutting cartridge, Gouge mode is not available.

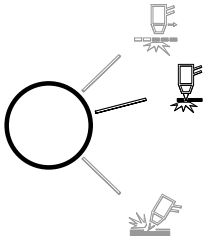

2. Make sure that the torch-lock switch is in the green "ready to fire" (✔) position.

   The first time that you pull the torch trigger after you set the torch to the "ready to fire" position, multiple puffs of air quickly come from the torch. This is a warning that the torch is active and will fire an arc the next time that you pull the trigger. Refer to Warning puffs of air (hand torches) on page 68.

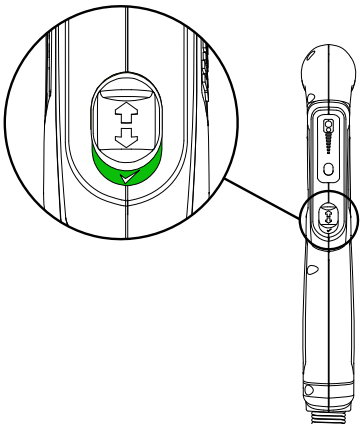

3. Flip the trigger's safety cover forward (toward the torch head) and pull the red torch trigger.

   After you complete a cut and release the torch trigger, air continues to flow from the torch to decrease the temperature of the cartridge. This is referred to as *postflow*.

   Always let postflow complete before you remove a cartridge.

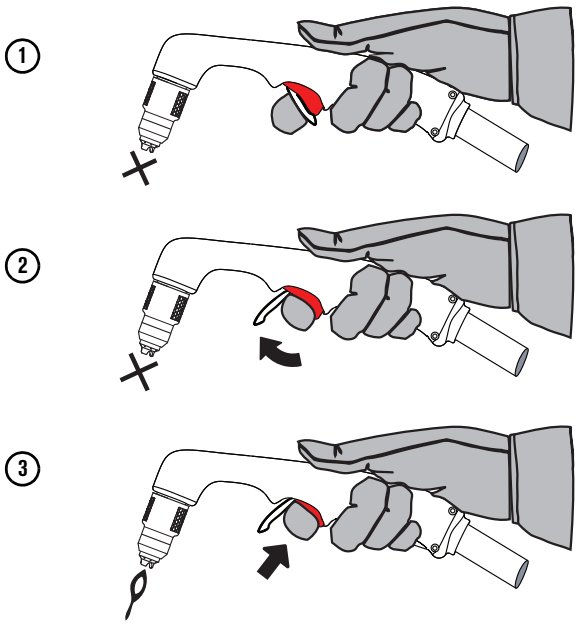

Start a cut from the edge of the workpiece

Slag produced during piercing can cause damage to the tip of the cartridge. Start the cut from the edge of the workpiece, when possible, to decrease this damage and to optimize cartridge life.

1. With the work clamp attached to the workpiece, hold the torch tip perpendicular (90°) to the edge of the workpiece.

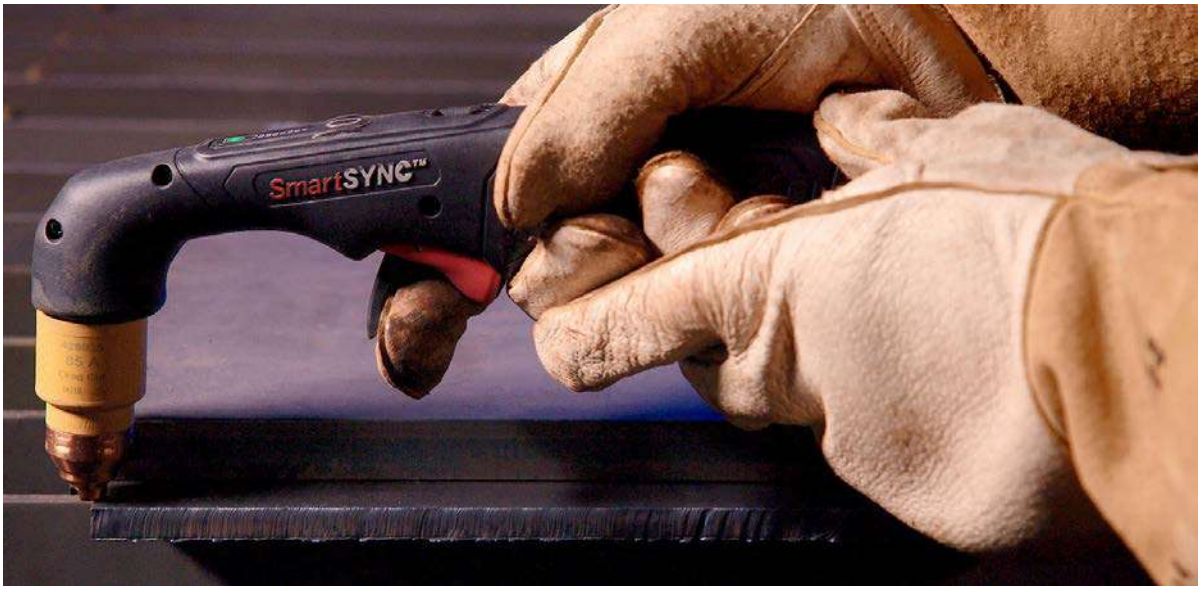

2. Pull the torch's trigger to start the arc. Stay at the edge until the arc has cut completely through the workpiece.

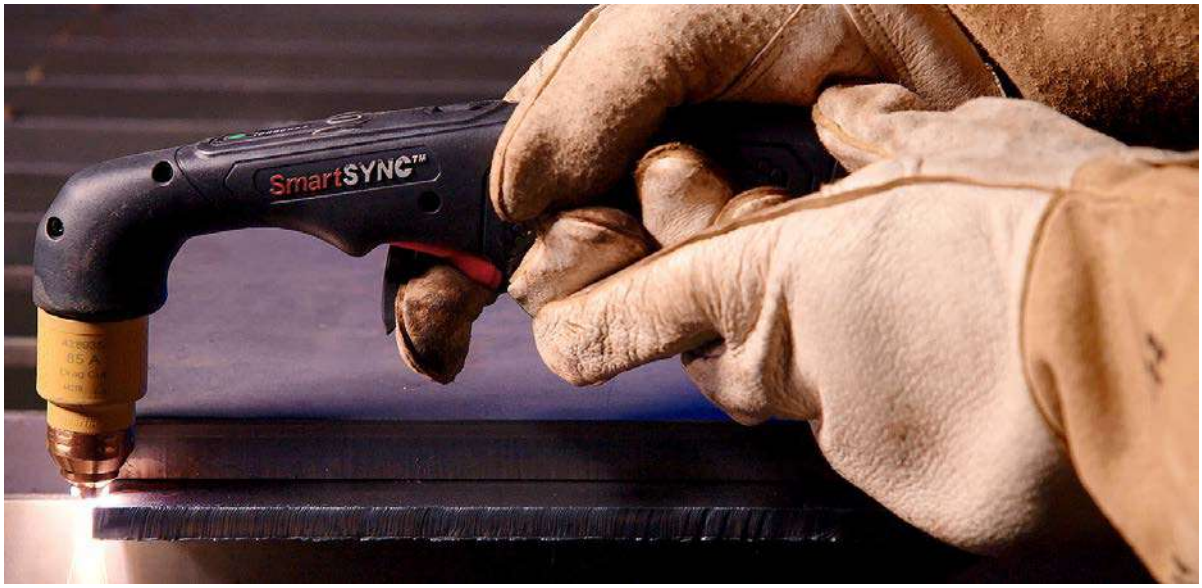

3. Drag the torch lightly across the workpiece to continue with the cut. Keep a smooth, stable pace.

Pierce a workpiece

⚠ WARNING

SPARKS AND HOT METAL CAN INJURE EYES AND BURN SKIN

When firing the torch at an angle, sparks and hot metal will spray out from the torch tip. Point the torch away from yourself and others. Always put on correct protective equipment including gloves and eye protection.

The hand torch can pierce interior features on metal. The type of pierce that you do relates to the thickness of the workpiece and the pierce capacity of the plasma power supply. (Refer to Recommended pierce capacity on page 33.)

- **Straight pierce** – Use a straight pierce to cut a workpiece that is thinner than 8 mm (5/16 inch). If a straight pierce does not pierce the workpiece, try a rolling pierce.
- **Rolling pierce** – Use a rolling pierce to cut a workpiece that is 8 mm (5/16 inch) or thicker, or if a straight pierce does not pierce the workpiece.

1. Attach the work clamp to the workpiece.
2. **Straight pierce:** Hold the torch perpendicular (90°) to the workpiece.

   Rolling pierce: Hold the torch at an approximate 30° angle to the workpiece with the torch tip touching the workpiece before firing the torch.

3. **Straight pierce:** Pull the torch trigger to start the arc.

   Rolling pierce: Pull the torch trigger to start the arc while still at an angle to the workpiece, then move the torch up to the perpendicular (90°) position.

4. Hold the torch in position while continuing to pull the trigger. When sparks go out below the workpiece, the arc has pierced the material.

5. When the pierce is complete, drag the torch tip lightly across the workpiece to continue with the cut.

Use a FlushCut specialty cartridge

FlushCut cartridges can remove lugs, bolts, pad eyes, and other attachments without piercing or damaging the workpiece below. You can also use FlushCut cartridges for metal washing. You can turn the tip of the FlushCut cartridge as necessary to get an angled plasma arc that lets you cut very close to the base material without leaving a large amount of remaining material to grind off.

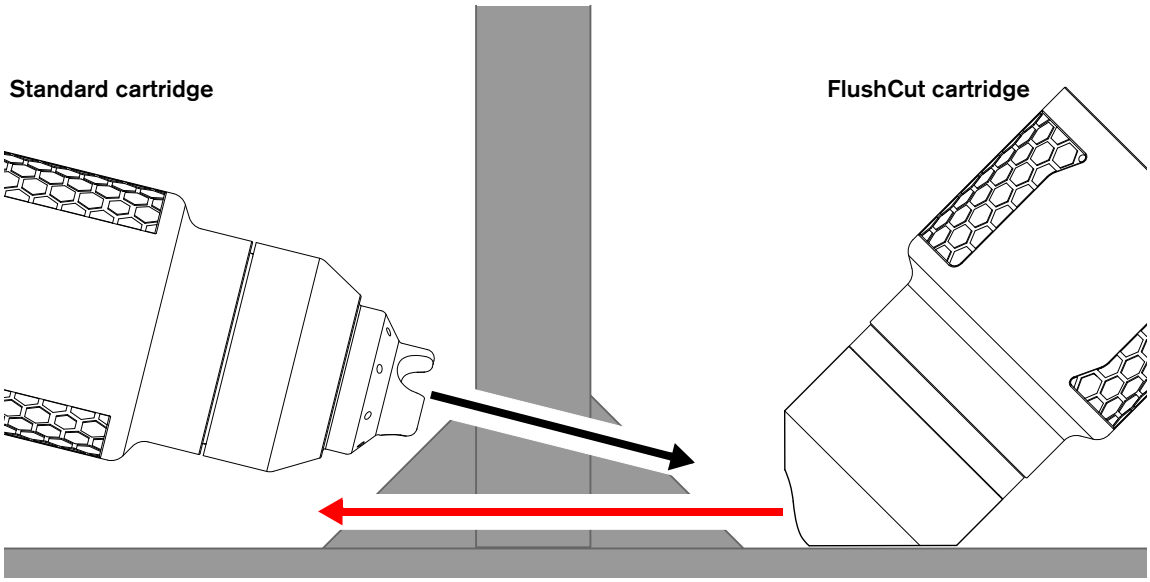

⚠ WARNING

ARC RAYS CAN BURN EYES AND SKIN

When you use FlushCut cartridges, wear a face shield that covers your entire face. Use a shield with a shade 10 lens.

Plasma arc rays produce intense visible and invisible (ultraviolet and infrared) rays that can burn eyes and skin.

⚠ WARNING

INSTANT-ON TORCHES – PLASMA ARC CAN CAUSE INJURY, BURNS

Ignition of the plasma arc occurs immediately when you pull the torch trigger. Before changing the cartridge, one of the following steps is necessary. Whenever possible, complete the first step.

- Set the power switch on the plasma power supply to OFF (**O**).

  OR

- Move the torch-lock switch to the yellow lock (**X**) position. Pull the trigger to make sure that the torch does not fire a plasma arc.

To use a FlushCut cartridge, do the following:

1. Loosely install the cartridge and turn the flat side of the tip of the cartridge onto the flat workpiece.

2. Make sure that the flat side of the tip of the cartridge is flush with the flat workpiece. Adjust as necessary.
3. Fully install the cartridge.
4. (Optional) To do metal washing, decrease the output current (A) as necessary.
5. Unlock the torch.
6. Put the flat side of the tip of the cartridge 3 mm – 6 mm (1/8 inch to 1/4 inch) from the vertical workpiece.

7. Pull the torch trigger to start the arc. Keep the torch in position until the arc transfers to the vertical workpiece and cuts completely through. The arc has cut completely through when sparks go out the other side of the vertical workpiece.

8. Drag the flat side of the tip of the cartridge along the flat workpiece. Keep a standoff of 3 mm – 6 mm (1/8 inch to 1/4 inch) from the vertical workpiece. Keep a smooth, stable pace.

9. If it is necessary to adjust the flat side of the tip of the cartridge to complete the cut, lock the torch before you touch the cartridge.

⚠ WARNING

RISK OF BURNS AND ELECTRIC SHOCK – USE INSULATED GLOVES

Always put on insulated gloves when changing the cartridges. The cartridges get very hot during cutting and can cause severe burns.

Touching the cartridges can also cause electric shock if the plasma power supply is ON and the torch-lock switch is not in the yellow lock (**X**) position.

Guidelines for hand torch cutting

- Drag the torch tip lightly and smoothly across the workpiece to keep a stable cut.

  Sometimes the torch sticks slightly to the workpiece when you cut with FineCut cartridges. This is not an indication of a problem.

- Pulling, or dragging, the torch across the cut is easier than pushing it.
- If sparks spray up from the workpiece, move the torch more slowly, or set the output current higher.
- While cutting, make sure that sparks are coming from the bottom of the workpiece. When cutting correctly, the sparks lag slightly behind the torch as you cut (15° – 30° angle from vertical).
- Hold the torch tip perpendicular to the workpiece so that the head of the torch is at a 90° angle to the cutting surface. Observe the cutting arc as the torch cuts.

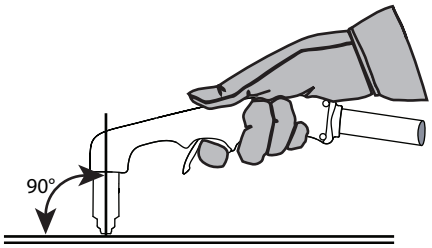

- If you fire the torch unnecessarily, you shorten the life of the cartridge.
- For straight-line cuts, use a straight edge as a guide. To cut circles, use a template or a radius cutter attachment (a circle cutting guide). For beveled cuts, use a bevel cutting guide. Refer to the *Powermax65/85/105 SYNC Parts Guide* (810490).

  To troubleshoot problems with cut quality, refer to Common problems on page 123.

Get the most out of your cartridges

How often it is necessary to change the cartridge on your hand torch relates to the following:

- **Gas supply quality**
  - It is extremely important to keep the gas supply line clean and dry. Oil, water, vapor, and other contamination in the gas supply can degrade cut quality and cartridge life. Refer to Gas supply source on page 54 and Add additional gas filtration (if necessary) on page 59.
- **Cutting technique**
  - Whenever possible, start cuts from the edge of the workpiece. This helps to extend the life of the cartridge. Refer to Start a cut from the edge of the workpiece on page 98.
  - Use the correct piercing method for the thickness of the workpiece that you are cutting. In many conditions, a rolling pierce method is an efficient way to pierce the workpiece while you decrease the cartridge wear that naturally occurs during piercing. Refer to Pierce a workpiece on page 100 for an explanation of the straight pierce and rolling pierce methods and when to use each.
- **Thickness of the workpiece being cut**
  - In general, the thicker the workpiece being cut, the more quickly the cartridges become worn. For best results, 80% of the workpieces that you cut should be equal to or less than the thickness specified for this system and cartridge. Refer to Cutting specifications on page 33.
  - For best results, do not cut material that is thicker than what is specified for this system and cartridge.
- **Expanded metal cutting and pilot arc time**
  - Expanded metal has a slotted or mesh pattern. Cutting expanded metal wears out cartridges more quickly because it requires a continuous pilot arc. A pilot arc occurs when the torch is fired but the plasma arc is not in contact with the workpiece.
  - Make sure that the operating mode is **not** set to Expanded Metal mode if you are not cutting expanded metal. Refer to page 76.
  - Fire the torch only when necessary to keep pilot arc time to a minimum.
  - Frequent pilot arcs cause the nozzle in the cartridge to wear more quickly. You can see the cumulative pilot arc time for a cartridge in the **PT** field on the **CARTRIDGE DATA** screen. Refer to Monitor data for individual cartridges on page 77.
- **Arc stretch when cutting**
  - To get maximum cartridge life, only stretch the arc when it is necessary. Drag the torch on the workpiece whenever possible. Refer to Guidelines for hand torch cutting on page 105.
- **Arc stretch when gouging**
  - The correct arc stretch while gouging keeps distance between the torch tip and the molten metal that builds up during the gouge. For recommended arc stretch lengths, refer to Gouge with the hand torch on page 112.

During standard hand cutting with Powermax65/85/105 SYNC systems under lab conditions, Hypertherm got 1 to 3 hours of actual “arc on” time.

Signs that a cartridge is near end-of-life

Usually, the best indication of when to install a new cartridge is when the cut quality is no longer satisfactory. When it is necessary to replace a cartridge, replace the full cartridge with a new one. **Do not try to disassemble the cartridge.**

Figure 5 – Cartridge components

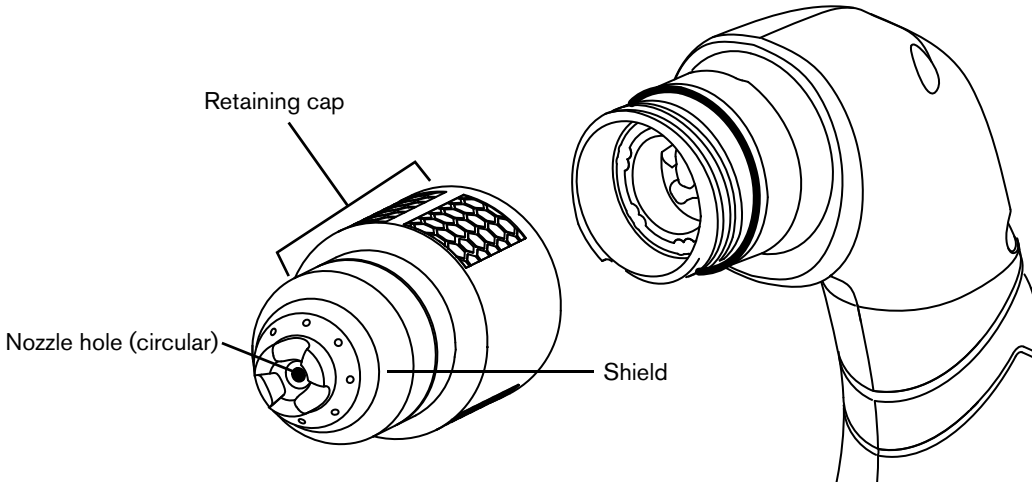

The following signs can be indications that a cartridge is near or at end-of-life:

- **Examine the nozzle hole.** A nozzle hole in good condition is circular. If the nozzle hole is not circular, replace the cartridge.
- **Look for a higher rate of 0-30-0 faults.** As a cartridge wears, unwanted material can collect inside the cartridge and cause 0-30-0 faults to occur. Refer to page 134. In some conditions, you can remove this material by carefully shaking the cartridge.
- **Examine the crown ❶.** The crown is the square copper piece inside of the cartridge. Push down the crown and then release the spring tension.

  A crown in good condition goes back to its start position. If the crown stays in the down position, carefully shake the cartridge. If the crown continues to stay in the down position, replace the cartridge.

- If the system shows an 0-32-0 or 0-32-1 fault code, install a new cartridge. Refer to Operational faults (0-nn-n) on page 134.

If you do a lot of piercing, it is possible to see black marks on the retaining cap. Usually this is not a sign that the cartridge is at end-of-life. Continue to cut with the cartridge until the cut quality is no longer satisfactory.

Hand torch components, dimensions, and weights

Components

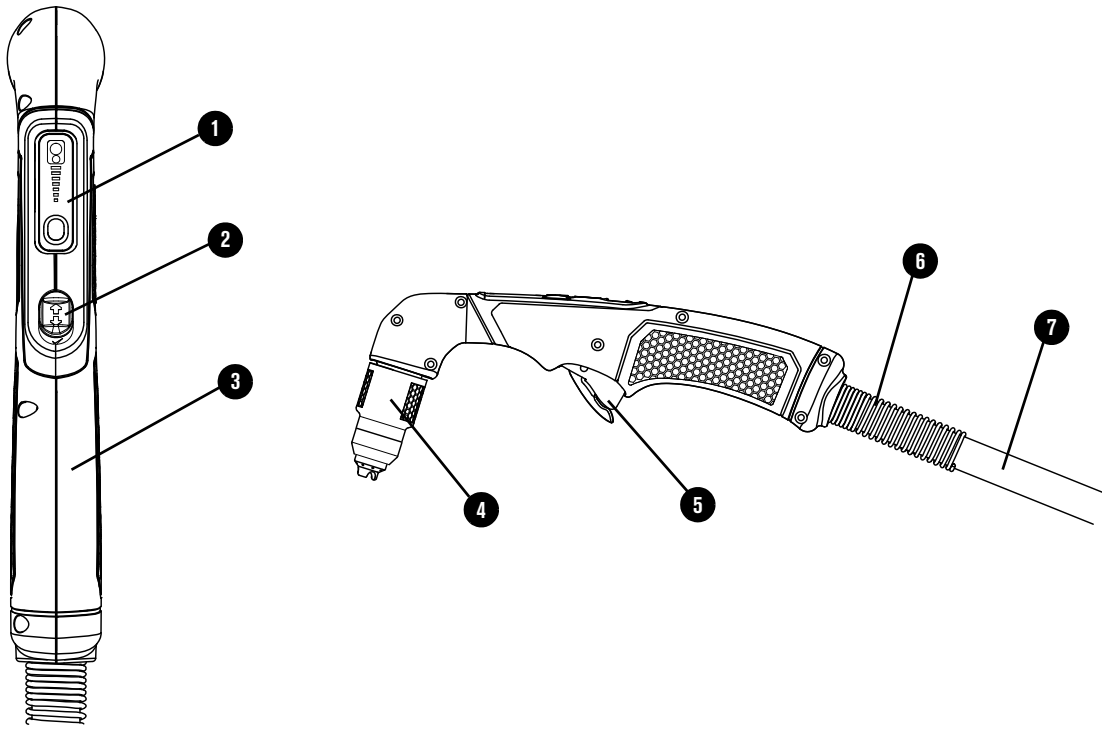

1 Amperage-adjustment control
2 Torch-lock switch
3 Shell
4 Cartridge
5 Safety trigger
6 Strain relief for torch lead
7 Torch lead

Dimensions

75° torch

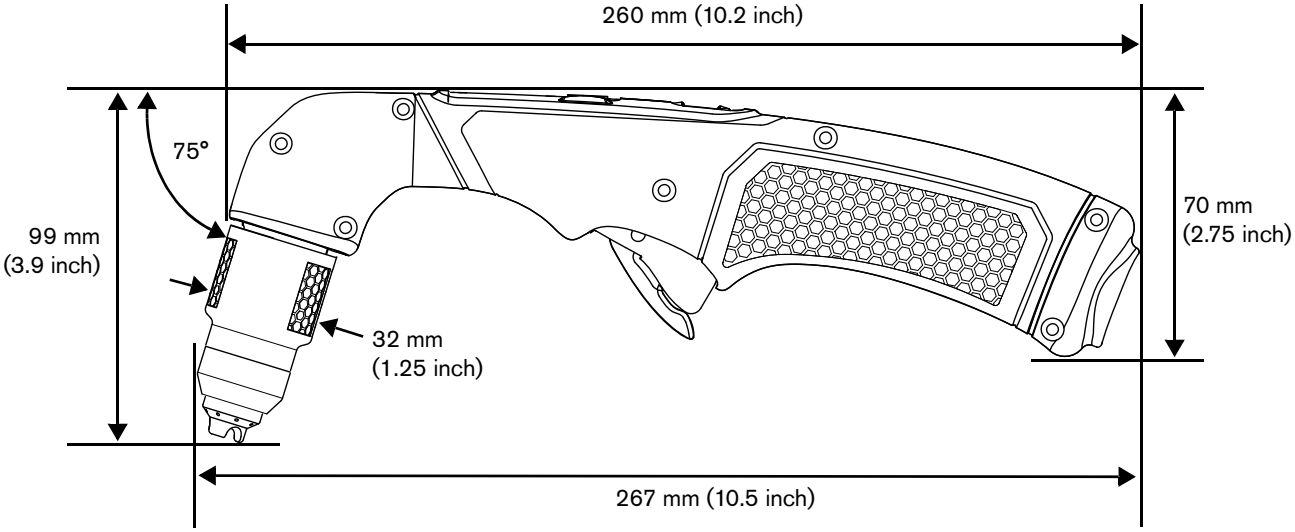

15° torch

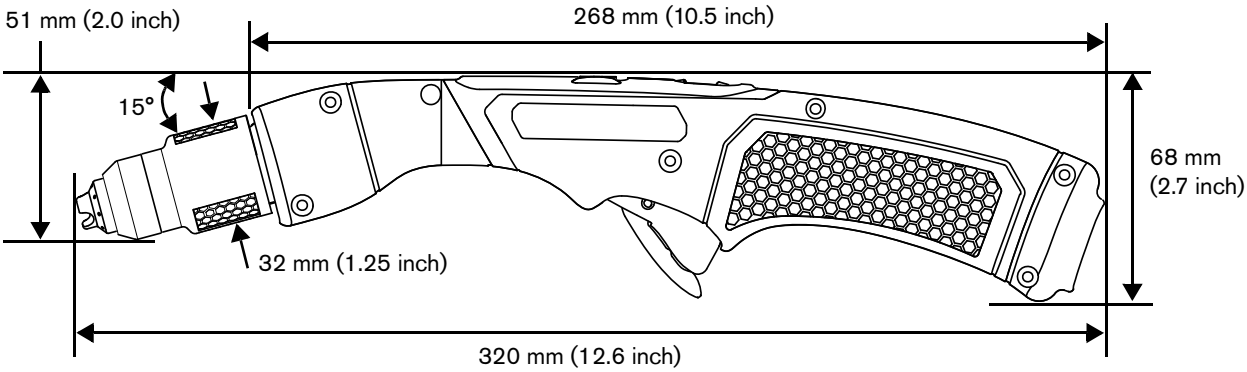

Drag cut cartridge

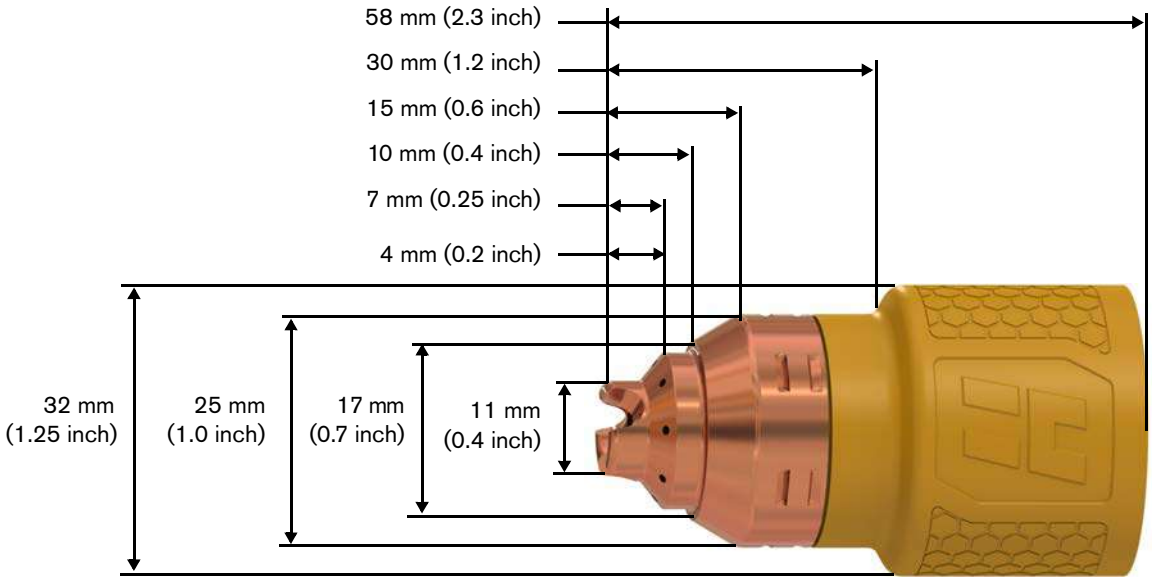

FineCut cartridge

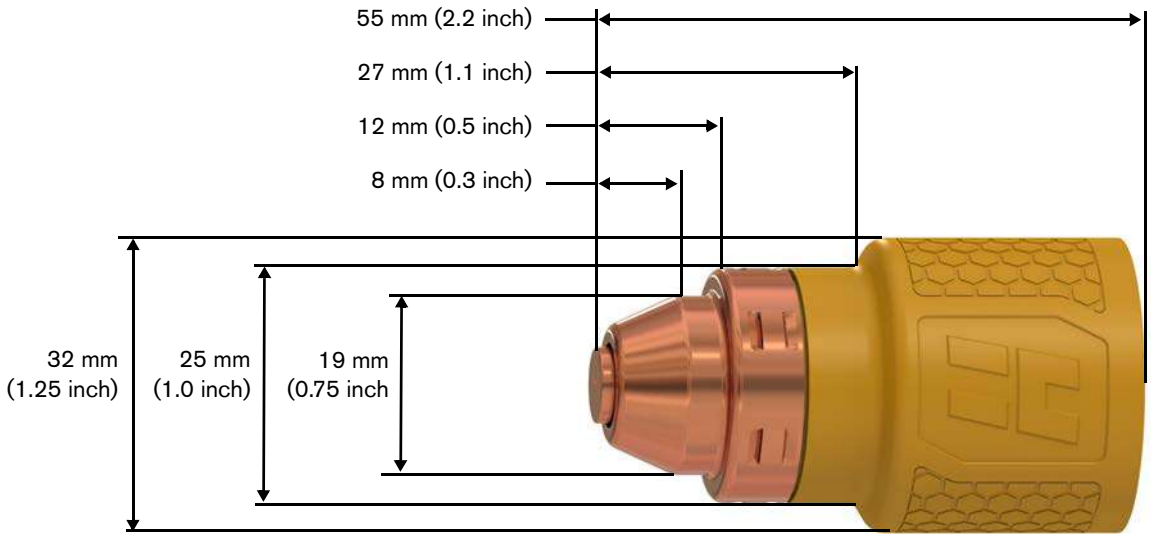

Weights

Torch	Weight*
Hand torch with 7.6 m (25 foot) lead	3.5 kg (7.7 lb)
Hand torch with 15 m (50 foot) lead	6.4 kg (14 lb)
Hand torch with 23 m (75 foot) lead	9.2 kg (20.3 lb)

* Without a cartridge installed.

5 Gouge with the Hand Torch

Select the correct gouging cartridge

Hypertherm offers the following gouging cartridges, which you can use with both the 15° and the 75° SmartSYNC hand torches. The 15° hand torch is designed to point heat away from the operator during heavy gouging.

Cartridge Type	Purpose
Maximum Control gouging (green)	Use these cartridges for more precise metal removal, shallow gouge profiles, and light metal washing. A slower gouging speed is recommended, but the diffuse plasma arc gives better visibility than Maximum Removal cartridges. If you are learning to gouge, start with Maximum Control cartridges.
Maximum Removal gouging (green)	Use these cartridges for aggressive metal removal, deep gouge profiles, and extreme metal washing. A faster gouging speed is recommended to control the concentrated plasma arc.

Plasma power supplies come with a starter set of Hypertherm cartridges. For a full list of the cutting and gouging cartridges available refer to the *Powermax65/85/105 SYNC Parts Guide* (810490).

The gouging cartridges can also be used on the machine torch. Refer to *Gouge with the Machine Torch* in the *Powermax65/85/105 SYNC Mechanized Cutting Guide* (810480).

Gouge with the hand torch

⚠ WARNING

SPARKS AND HOT METAL CAN INJURE EYES AND BURN SKIN

When firing the torch at an angle, sparks and hot metal will spray out from the torch tip. Point the torch away from yourself and others. Always put on correct protective equipment including gloves and eye protection.

1. Install the Maximum Control or Maximum Removal gouging cartridge.

   When you install a gouging cartridge, the system goes to **Gouge** mode and the Gouge LED comes ON (refer to Hand torch LED behavior on page 73).

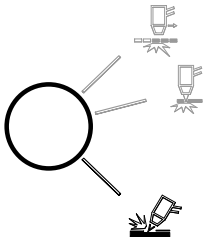

   When you install a gouging cartridge, Cut mode and Expanded Metal mode are not available.

2. Before firing the torch, hold the torch at approximately a 40° – 45° angle to the workpiece with the torch tip approximately 6 mm – 12 mm (1/4 in. – 1/2 in.) from the workpiece.

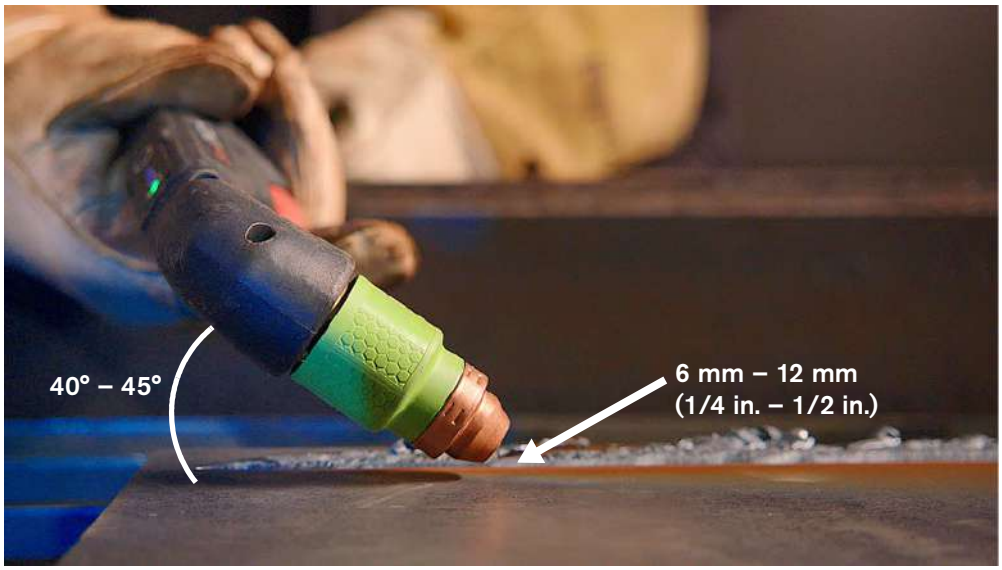

3. Pull the trigger to get a pilot arc. Transfer the arc to the workpiece.

4. Stretch the arc to 25 mm – 32 mm (1 in. – 1-1/4 in.).

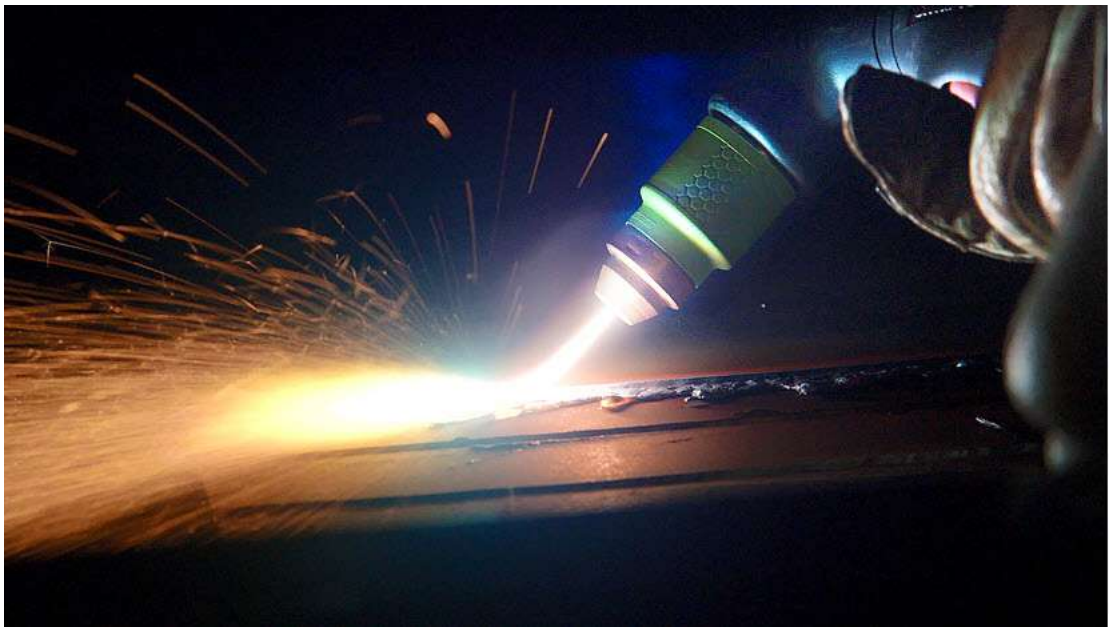

5. Keep this position as you push the plasma arc in the direction of the gouge that you want to create.

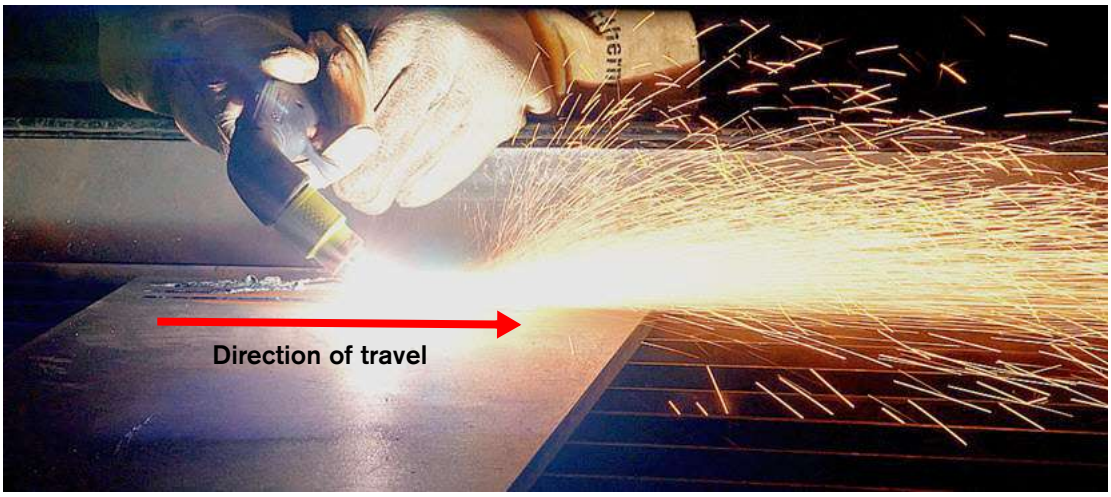

6. Change the position of the torch as necessary to get the gouge contour that you want. Refer to Change the gouge contour on page 114. Keep at least a small distance between the torch tip and the molten metal to increase cartridge life and prevent damage to the torch.

Change the gouge contour

The width and the depth of the gouge contour are a result of the following factors. **Adjust these factors in combination to get the gouge that you want.**

Figure 6 – Factors that change the gouge contour

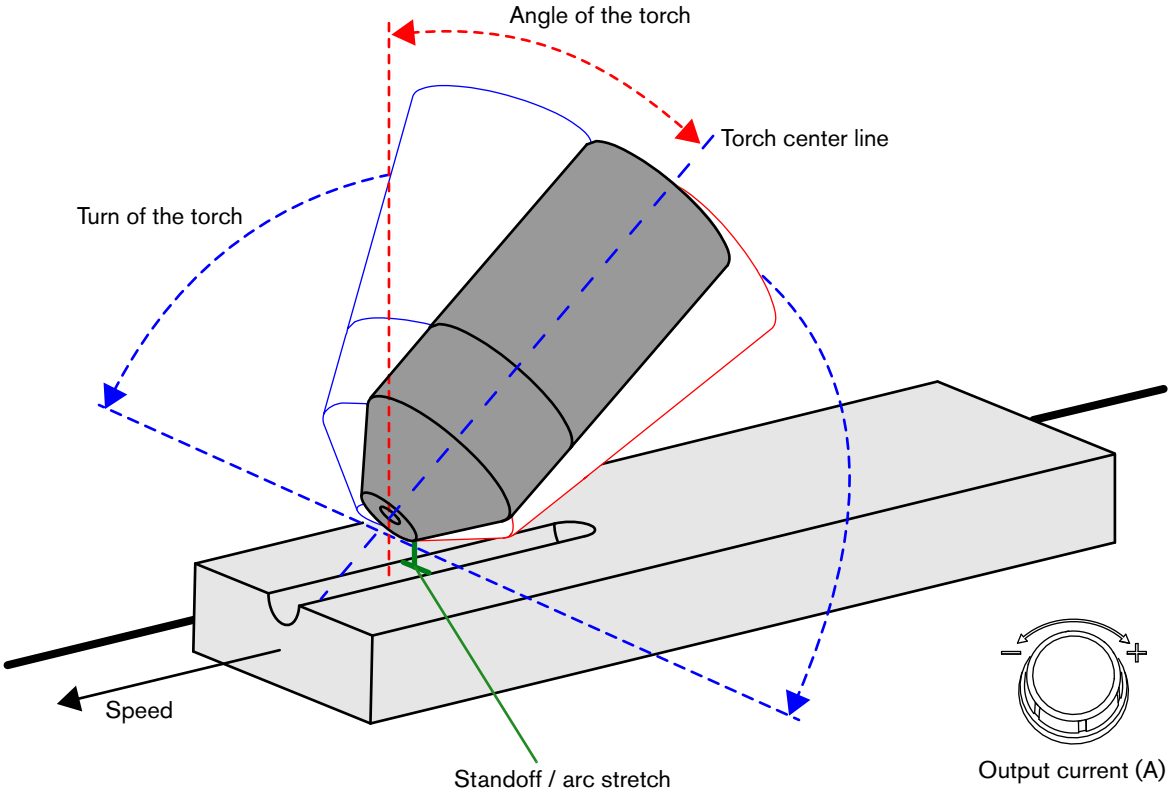

- **Output current (A) of the plasma power supply** – Decrease the amperage on the front panel to make the gouge narrower and shallower ❶. Increase the amperage to make the gouge wider and deeper ❷.

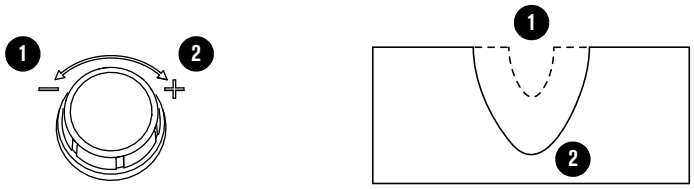

  - Arc stretch is related to the output current (A) of the plasma power supply. The higher the amperage, the longer that you can stretch the arc. Hypertherm recommends that you keep amperage and arc stretch consistent.
  - The lowest and highest possible amperage setting relates to the plasma power supply and the Hypertherm cartridge. Refer to Amperage settings by plasma power supply and cartridge on page 72.

- **Angle of the torch to the workpiece** – Put the torch in a more upright position to make the gouge narrower and deeper ❶. Tilt down the torch so that it is closer to the workpiece to make the gouge wider and more shallow ❷.

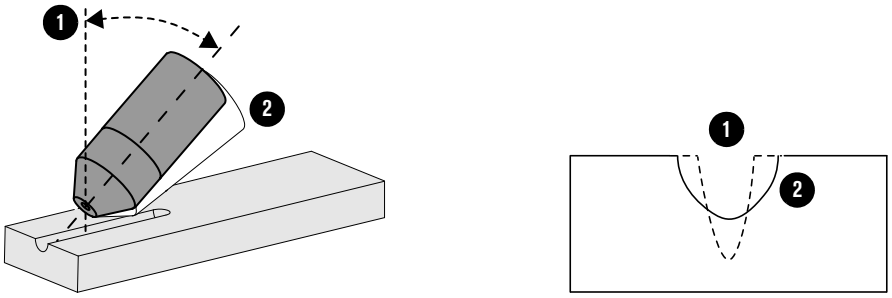

- **Turn of the torch –** Turn the torch relative to the torch center line to make the gouge flatter and steeper on one side ❶.

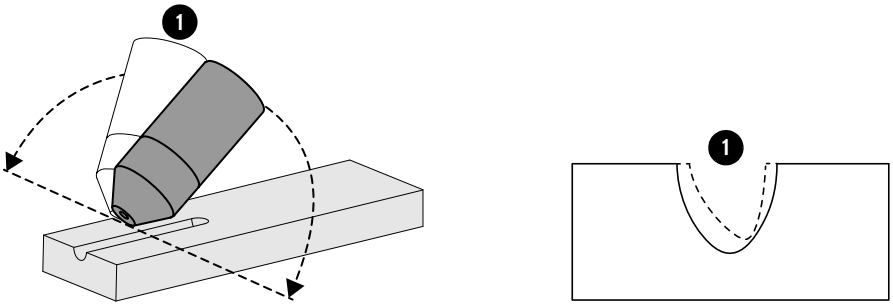

- **Torch-to-work standoff / arc stretch –** Move the torch away from the workpiece to make the gouge wider, shallower, and smoother on the bottom ❶. Move the torch closer to the workpiece to make the gouge narrower and deeper ❷.

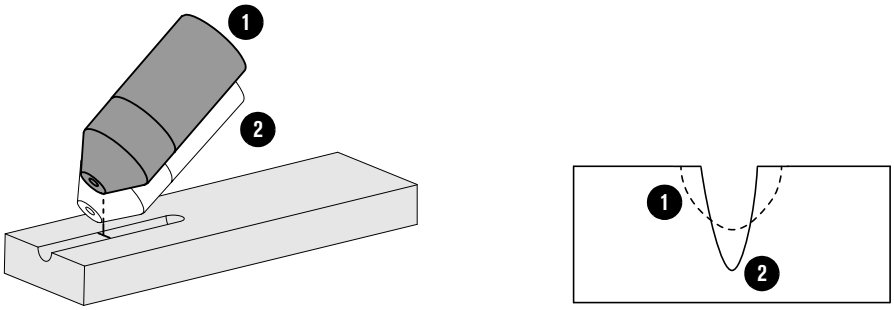

  - Arc stretch is related to the output current (A) of the plasma power supply. The higher the amperage, the longer that you can stretch the arc. Hypertherm recommends that you keep amperage and arc stretch consistent.
  - Keep at least a small distance between the torch tip and the molten metal to increase cartridge life and prevent damage to the torch.

- **Speed of the torch –** Increase the speed of the torch movement to make the gouge narrower and more shallow ❶. Decrease the speed of the torch movement to make the gouge wider and deeper ❷.

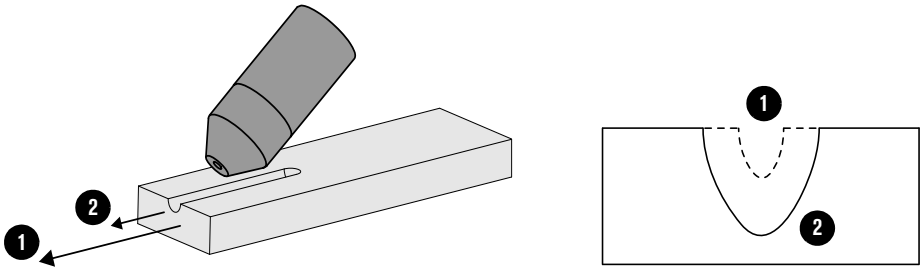

6 Troubleshoot Common Problems

⚠ WARNING

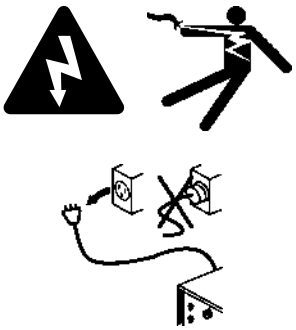

ELECTRIC SHOCK CAN KILL

Disconnect electric power before doing installation or maintenance. You can get a serious electric shock if electric power is not disconnected. Electric shock can seriously injure or kill you.

All work that requires removal of the plasma power supply outer cover or panels must be done by a qualified technician.

Refer to the *Safety and Compliance Manual* (80669C) for more safety information.

⚠ WARNING

INSTANT-ON TORCHES – PLASMA ARC CAN CAUSE INJURY, BURNS

Ignition of the plasma arc occurs immediately when you pull the torch trigger. Before changing the cartridge, one of the following steps is necessary. Whenever possible, complete the first step.

- Set the power switch on the plasma power supply to OFF (**O**).

  OR

- Move the torch-lock switch to the yellow lock (**X**) position. Pull the trigger to make sure that the torch does not fire a plasma arc.

Start here: troubleshooting checklist

When a troubleshooting problem occurs, go through the following checklist first. It is necessary to complete these steps before doing the recommendations in the rest of this chapter.

As you do this checklist, record any problems or questions. If you cannot find a solution to the problem by complying with the recommendations in this chapter, or if further aid is necessary, do the following:

1. Get the serial number for your system from the data plate that is on the rear panel.
2. Speak to your Hypertherm distributor or authorized repair facility.
3. Speak to the nearest Hypertherm office shown in the front of this manual.

Refer to the *Powermax65/85/105 SYNC Parts Guide* (810490) for information on common replacement parts.

Examine the power source	
☐	Can the power source supply sufficient power to the plasma power supply for the applications that you are doing? If you are using a generator, make sure that it has sufficient power to let you do a full plasma arc stretch. Refer to Use a generator (if necessary) on page 50 and Troubleshoot power-related problems with generators on page 148.
☐	Are the circuit breakers or fuses sufficient for your plasma power supply and for the applications that you are doing? Refer to page 40. The recommended fuse / breaker sizes let the input current increase quickly when you stretch the plasma arc.
☐	Did the circuit breaker open (trip)?

Make sure that the mechanized cutting system is grounded and set up correctly (if applicable)	
☐	Is the mechanized cutting system correctly grounded or bonded? For information on grounding best practices, refer to the *Powermax65/85/105 SYNC Mechanized Cutting Guide* (810480).
☐	Does the routing of all cables keep electromagnetic interference (EMI), also called noise, to a minimum? For information on best practices to decrease noise, refer to the *Powermax65/85/105 SYNC Mechanized Cutting Guide* (810480). For example, keep the torch lead and work lead together by using cable ties or intertwining them like a twisted pair. Also keep the routing of the torch lead and work lead separate from the shielded cables and from all other components of the mechanized cutting system.
☐	Does other industrial equipment share the same ground as the plasma power supply? This can cause noise problems. For example, do you have an inverter-type welder with a work lead that is connected to the same cutting table (or workpiece) as the plasma power supply? Disconnect the welder from power, and remove its work lead from the cutting table.
☐	Is excess cable wound into coils? This can cause noise problems. Instead, put the excess cable down flat or in a figure-8 shape.
☐	If you are using torch height control (THC), is an ohmic contact ring (428895) installed on the Hypertherm cartridge? Is the ohmic contact ring connected correctly to the THC?

Examine the plasma power supply	
☐	Is the plasma power supply in an upright position on a flat, level surface?
☐	Does the plasma power supply have sufficient ventilation (approximately 0.25 m or 10 inches of clearance on all sides)?
☐	Are the louvers in the plasma power supply cover blocked?
☐	Is the power switch on the rear panel of the plasma power supply operating correctly?
☐	Is there any visible damage to the plasma power supply?

Examine the front panel controls	
☐	Is the fault LED on? Does a fault code and fault icon show on the status screen? Is the AC LED flashing? Refer to page 132.
☐	Make sure that the operating mode is correct. For example, use Expanded Metal mode only when you are cutting expanded metal. Refer to page 75.
☐	Does the status screen show the non-default configuration icon (at right) but not the 105 icon? Does the plasma power supply operate as expected? For example, does the plasma power supply not change to the correct operating mode for the Hypertherm cartridge that you installed when you are using a SmartSYNC torch and Hypertherm cartridge? If so, set the plasma power supply back to factory default settings to see if that is a solution to the problem. Push and hold and at the same time for approximately 2 seconds. Refer to page 156.

Examine the power cord*	
☐	Is the power cord plugged in? Or is it connected correctly to a line-disconnect switch or other power source?
☐	Is there any visible damage to the power cord? Are any wires exposed or frayed?
☐	Examine the power cord wires in the power plug or line-disconnect box. Are any of the wires short-circuited?
☐	Is the power plug correct for the power cord? For example, do not install a 1-phase power *plug* on a 3-phase power *cord*. Refer to Prepare the power cord and plug on page 44.
☐	**Powermax65/85 SYNC CSA plasma power supplies:** If you are using the plasma power supply on 1-phase power, did you install a 1-phase power cord? Are the wires in the power cord and power plug correct for 1-phase power? The plasma power supply comes with a 3-phase power cord. Refer to page 46. Powermax105 SYNC plasma power supplies cannot be used on 1-phase power.
☐	Is the power cord ground wire connected to ground in the plasma power supply and in the power plug or line-disconnect box?
☐	Are the rest of the power cord wires connected correctly in the plasma power supply and in the power plug or line-disconnect box? Refer to page 44.
☐	Are the power cord wires fully tightened inside the plasma power supply and in the power plug or line-disconnect box?

* Make sure that any changes to the plasma power supply or power cord are done by a licensed electrician.

Examine the work lead and work clamp	
☐	Is the work lead connected correctly to the plasma power supply? Make sure that you turn the connector clockwise approximately 1/4 turn until the connector is fully engaged in the lock position. Refer to page 63.
☐	If you are using a water table, are the work clamp and work lead above the water line? It is very important to prevent the work lead from getting wet. Hypertherm recommends that you do the following: ▪ Connect the work lead to the outside frame of the water table. ▪ Put the plasma power supply higher than the work clamp and the water table. These steps decrease the likelihood that the work lead will get wet and that water will get into the plasma power supply through the work lead, which can cause severe damage to the plasma power supply.
☐	Examine the work lead. Are any wires exposed or frayed? Is the lead twisted or kinked?
☐	Are the work lead and work clamp correctly rated for the plasma power supply? For example, do not use a 65 A work lead with a Powermax85 SYNC plasma power supply. The amperage is identified near the rubber boot of the work lead connector.
☐	Is the work clamp connected to the workpiece that you are cutting? For mechanized cutting, is the clamp connected to the cutting table?
☐	Does the work clamp have good metal-to-metal contact? If not, remove any rust, paint, or other debris that causes interferenceto give a clean surface for a better connection.

Examine the torch and torch lead	
☐	Is the torch lead connected correctly to the plasma power supply? Refer to page 62. The torch lead connector makes a click when it is fully connected.
☐	Examine the torch lead. Are any wires exposed or frayed? Is the lead twisted or kinked?
☐	Examine the torch handle or shell. Are any wires exposed? Are any wires pinched at the seam where the 2 halves of the shell come together? Are there any other signs of damage to the shell?
☐	**SmartSYNC hand torches:** Is the status LED on the torch solid yellow or red? Is the status LED flashing yellow? Refer to page 132.
☐	**All hand torches:** Are there any signs of damage to the torch trigger? Are the trigger and safety latch operating correctly?
☐	Is the torch-lock switch operating correctly? Refer to page 174. The mini machine torch does not have a torch-lock switch.

Examine the Hypertherm cartridge	
☐	Is the Hypertherm cartridge worn or damaged? A higher rate of 0-30-0 faults is typical as a cartridge gets near end-of-life. Refer to Signs that a cartridge is near end-of-life on page 107.
☐	Is the Hypertherm cartridge installed correctly? Refer to page 64.
☐	Did you select the correct Hypertherm cartridge for the job that you are doing? Refer to page 95 and page 111.
☐	Is the operating mode correct for the Hypertherm cartridge that you are using? Use a cutting cartridge in Cut mode and Expanded Metal mode. Use a gouging cartridge in Gouge mode. Refer to page 75.

Examine the gas supply	
☐	**Examine the whole gas supply line. Are there any signs of contamination, such as from oil, water, or dirt? It is extremely important to keep a clean, dry gas line. Refer to .**
☐	Is your air filtration system sufficient to prevent moisture, oil, and other contaminants from getting into the plasma power supply's gas line? Refer to . Add additional filtration if necessary. Refer to page 59.
☐	Is the gas supply hose connected correctly to the fitting on the rear panel of the plasma power supply?
☐	Is the gas supply hose connected correctly to the air compressor, gas cylinder, or other gas source?
☐	Examine each fitting and connection point in the gas supply line. Are there any signs of leaks?
☐	Is the gas supply hose twisted or kinked? Are there any other signs of damage to the hose?
☐	Is there anything that can be causing the pressure to decrease too much while cutting? For example, is the gas supply hose too long? Are there other devices that use gas from the same source?
☐	Does the gas supply hose have a minimum internal diameter that is sufficient? Use an internal diameter of 10 mm (3/8 inch) for hoses that are less than 15 m (50 feet). Use an internal diameter of 13 mm (1/2 inch) for hoses that are 15 m – 30 m (50 feet – 100 feet).
☐	Is sufficient gas pressure getting to the plasma power supply? Refer to page 126.
☐	Are you able to keep gas pressure constant while you are cutting? Refer to page 126.Do a gas test to see if the plasma power supply's actual output gas pressure is lower than the set pressure by more than an acceptable quantity. The set pressure is the gas pressure that the system sets to align with the type of cartridge and torch installed. Refer to page 151. Is there anything that can be causing the pressure to decrease too much while cutting? For example, is the gas supply hose too long? Are there other devices that use gas from the same source?
☐	Is there anything that can be causing the pressure to decrease too much while cutting? For example, is the gas supply hose too long? Are there other devices that use gas from the same source?
☐	Examine the gas supply hose. Is it twisted or kinked? Are there any other signs of damage to the hose?
☐	Examine each fitting and connection point in the gas supply line. Are there any signs of leaks?
☐	Examine the filter element in the plasma power supply's built-in air filter. Is it contaminated? To replace it, refer to page 177.

Examine the gas quality	
☐	Examine the whole gas supply line. Are there any signs of contamination, such as from oil, water, or dirt? It is extremely important to keep a clean, dry gas line. Refer to page 127.
☐	Is your air filtration system sufficient to prevent moisture, oil, and other contaminants from getting into the plasma power supply's gas line? Refer to page 127.
☐	Examine the filter element in the plasma power supply's built-in air filter. Is it contaminated? To replace it, refer to page 177.

Common problems

Problem	Solution
The cut quality is unsatisfactory.	▪ Examine the Hypertherm cartridge. Replace it if it is worn or damaged. A higher rate of 0-30-0 faults is typical as a cartridge gets near end-of-life. Refer to Signs that a cartridge is near end-of-life on page 107 and Cartridge maintenance on page 176. ▪ Make sure that the work lead connection to the plasma power supply is tight. Make sure that there is no damage to the work lead. ▪ Make sure that the torch is being used correctly. Refer to About the hand torch on page 94. For a machine torch, refer to the *Powermax65/85/105 SYNC Mechanized Cutting Guide* (810480). ▪ Examine the gas pressure and the gas supply hose. Refer to page 126. ▪ Examine the gas filtration system for signs of contaminants that are possibly causing interference with plasma power supply performance. Refer to page 127. ▪ Adjust the cut speed. ▪ Operate the plasma power supply without using an extension cord. If you must use an extension cord, use a heavy conductor cord of the shortest possible length. Refer to page 46.
The ON / OFF power switch is set to ON (**I**), but the power ON LED (AC) is off.	▪ Make sure that the power cord is connected correctly to the power outlet or line-disconnect switch box. ▪ Make sure that the power is on at the main power panel or at the line-disconnect switch box. ▪ Make sure that the circuit breaker did not open (trip). ▪ Make sure that the line voltage is not too low (more than 15% below the rated voltage). Refer to page 22 and page 40.
Nothing shows on the LCD screen, but the ON / OFF power switch is set to ON (**I**), and the power ON LED (AC) is on	▪ A qualified service technician must examine the system. Speak to your distributor or authorized repair facility.
The LCD screen on the front panel is too bright or too dark.	▪ Very hot environments can make the LCD screen darker. Very cold environments can make the LCD screen brighter. Adjust the brightness and contrast settings as necessary on the LCD Display screen (**LCD DISPLAY**). Refer to page 83.
The cartridge end-of-life detection feature is on, but it is not working.	The plasma power supply temporarily disables the Hypertherm cartridge end-of-life detection feature when one of the following conditions occurs, even when the feature is on: ▪ You install a FineCut hand cutting cartridge. ▪ You set the output current below 40 A for any type of Hypertherm cartridge. The cartridge end-of-life detection feature is different when the system is in basic mode. Refer to page 80 for more information.

Problem	Solution
The system changes the gas pressure after I set it manually.	The following conditions cause the system to override a manual gas pressure setting with the default gas pressure setting that matches the type of cartridge installed on the torch: ▪ Install a different type of cartridge. ▪ Adjust the gas pressure while the torch is locked and then unlock the torch. Go back to manual gas pressure mode, and set the gas pressure again. Make sure that the torch is unlocked before you set the gas pressure. Refer to page 75.
The system changes the output current (A) or the operating mode after I set them.	▪ Set the torch-lock switch to the “ready to fire” (✓) position *before* you adjust the amperage or operating mode. The system does not keep those settings while the torch-lock switch is in the yellow lock (**X**) position. When you set the torch-lock switch to the “ready to fire” (✓) position, the system automatically sets the amperage and operating mode to match the type of cartridge installed on the torch. Refer to page 70.
The LCD screen shows a **FACTORY RESET?** message when I try to go to the service screens.	▪ The **FACTORY RESET?** message shows when you push and hold and for approximately 2 seconds. The **Cancel** button is selected by default. Push to cancel the reset and go back to the screen you were on without making changes. Refer to page 156 for more information. ▪ To go to the service screens, push and hold for 2 seconds. Refer to page 158.

Cold restarts and quick restarts

To restart the plasma power supply, set the power switch on the plasma power supply to OFF (**O**) and then set the power switch to ON (**I**).

In some conditions, it is possible that you will be asked specifically to do a “cold restart” or a “quick restart.”

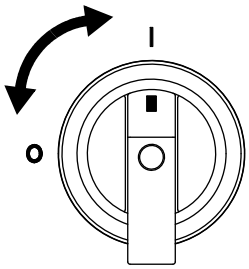

Do a cold restart

1. Set the power switch on the plasma power supply to OFF (**O**).
2. Wait approximately 1 minute.

   If you are using a SmartSYNC hand torch, wait until all of the amperage LEDs on the hand torch go off.

3. Set the power switch on the plasma power supply to ON (**I**).

Do a quick restart

1. Set the power switch on the plasma power supply to OFF (**O**).
2. Immediately set the power switch on the plasma power supply to ON (**I**).

   If a fault occurs while you are using a generator, a quick restart does not always remove the fault. Do a cold restart instead.

Examine the gas pressure

- **Inlet gas supply:** Incorrect gas pressure can cause errors that prevent cutting or problems with cut quality. Refer to page 54 and page 57 for information on the inlet gas supply requirements for this plasma power supply. For optimum system performance, make sure that the inlet gas pressure stays between 7.6 bar – 8.3 bar (110 psi – 120 psi) while gas is flowing. **Never use more than the maximum gas pressure of 9.3 bar (135 psi).**
- **Gas hose:** An incoming gas supply hose with too small a diameter can cause problems with cut quality and cut performance. For gas hoses that are less than 15 m (50 feet), use an internal diameter of 10 mm (3/8 inch) or greater. For gas hoses that are 15 m – 30 m (50 feet – 100 feet), use an internal diameter of 13 mm (1/2 inch) or greater.
- **Pressure setting:** The plasma power supply adjusts gas pressure automatically, but you can adjust the gas pressure manually if necessary. Refer to page 74.

  If you manually adjust the gas pressure and then start to see problems with cut quality or cut performance, set the gas pressure back to the default setting. Refer to page 75.
- **Gas test:** You can do a gas test to see if the plasma power supply's actual output gas pressure is lower than the set pressure by more than an acceptable quantity. The set pressure is the gas pressure that the system sets to align with the type of cartridge and torch installed. Refer to page 151.
- **Pressure gauge:** Install an inline pressure gauge at the gas inlet on the back of the plasma power supply, after all external filtration. Use this gauge to monitor the gas pressure during cutting and when the system is idle. The gas pressure should be stable. For optimum system performance, make sure that the inlet gas pressure stays between 7.6 bar – 8.3 bar (110 psi – 120 psi) while gas is flowing.

Examine the gas quality

It is extremely important to keep a clean, dry gas line to prevent oil, water, dirt, and other contaminants from causing damage to internal components. A clean gas line also helps you to get optimal cut quality and consumable life.

Dirty, oily air is the root cause of many common problems that occur in Powermax plasma power supplies. In some conditions it can void the warranty on the plasma power supply and torch. Refer to the gas quality recommendations in the ratings table on page 22.

The plasma power supply's built-in air filter can remove particulates as small as 5 microns. It can also remove some moisture from the gas supply. But if you work in an environment that is extremely warm and humid, or if work site conditions let oil, vapor, or other contaminants into the gas line, install an external filtration system that cleans the gas supply before it gets into the plasma power supply. Refer to page 59.

NOTICE

DIRTY, OILY AIR CAN CAUSE DAMAGE TO THE AIR FILTER BOWL

Synthetic lubricants containing esters that are used in some air compressors can cause damage to the polycarbonates in the air filter bowl. Add additional gas filtration if necessary.

To keep a clean gas line:

1. Examine the air filter element in the plasma power supply's built-in air filter. Replace it if it is contaminated. Refer to page 177.
2. Clean the air filter bowl. Remove oil, dirt, and other contaminants.

   A yellow residue on the filter bowl shows that oil is getting into the gas supply line.

3. Examine the O-ring at the top of the air filter bowl. Replace it if it has cracks or other damage.
4. If you use an external air filtration system, clean or replace any parts in it that are possibly contaminated.

Common cutting and gouging problems

Hand cutting problems

For troubleshooting common mechanized cutting problems, refer to the *Powermax65/85/105 SYNC Mechanized Cutting Guide* (810480).

Problem	Solution
Pulling the torch trigger does not fire an arc. Instead, the torch puts out short puffs of air, and the plasma power supply sounds like it is releasing pressure.	▪ The first time that you pull the torch trigger after you set the torch-lock switch to the "ready to fire" (✔) position, multiple puffs of air quickly come from the torch. With each puff of air, the plasma power supply makes a pressure-release sound. This is a warning that occurs when you lock and then unlock the torch without setting the power switch on the plasma power supply to OFF (**O**). (The 0-50-1 fault code also shows on the status screen.) **This does not identify a fault condition.** The purpose of the warning is to tell you that the torch is unlocked and will fire a plasma arc the next time that you pull the trigger. Refer to page 68.
The plasma arc sputters or hisses, or you lose the plasma arc.	▪ Make sure that the Hypertherm cartridge is installed correctly. ▪ Examine the Hypertherm cartridge. Replace it if it is worn or damaged. A higher rate of 0-30-0 faults is typical as a cartridge gets near end-of-life. Refer to Signs that a cartridge is near end-of-life on page 107 and Cartridge maintenance on page 176. ▪ Examine the gas filtration system for signs of moisture. Refer to page 127.
Cartridge life is shorter than expected.	▪ Examine the gas pressure and the gas supply hose. Refer to page 126. ▪ Examine the gas filtration system for signs of moisture. Refer to page 127. ▪ Restart the plasma power supply. Does it correctly recognize the type of Hypertherm cartridge installed? Does it correctly set the amperage and operating mode for the cartridge? If it does not, look at the LCD screen. Do you see the non-default configuration icon (at right)? If yes, there is possibly a system configuration setting that you must change. Refer to page 127. ▪ Examine the cut data on the Cartridge Data screen (refer to page 160) and the Power Supply Data screen (page 162). Also refer to Get the most out of your cartridges on page 106.
The plasma arc does not transfer to the workpiece.	▪ Clean the area where the work clamp touches the workpiece. Remove any rust, paint, or other material. Make sure that there is good metal-to-metal contact. ▪ Examine the work clamp for damage. Repair or replace it if necessary. ▪ Move the torch closer to the workpiece and fire the torch again. Refer to Install and Set Up the Plasma Power Supply on page 19. ▪ Examine the work lead for signs of damage. Replace it if necessary. Refer to the *Powermax65/85/105 SYNC Parts Guide* (810490).

Problem	Solution
The plasma arc goes out but ignites when you pull the torch trigger again.	▪ Decrease the length of the arc stretch. Whenever possible, drag the torch on the workpiece. Refer to page 98. ▪ Examine the Hypertherm cartridge. Replace it if it is worn or damaged. A higher rate of 0-30-0 faults is typical as a cartridge gets near end-of-life. Refer to Signs that a cartridge is near end-of-life on page 107 and Cartridge maintenance on page 176. ▪ Make sure that the incoming gas supply hose has an internal diameter of 9.5 mm (3/8 inch) or greater. ▪ Examine the gas filtration system for contamination that is possibly interfering with plasma power supply performance. Refer to page 127. ▪ If you manually adjusted the gas pressure before this problem occurred, set the gas pressure back to the default setting. Refer to page 75.
The torch does not cut completely through the workpiece.	▪ Examine the Hypertherm cartridge. Replace it if it is worn or damaged. A higher rate of 0-30-0 faults is typical as a cartridge gets near end-of-life. Refer to Signs that a cartridge is near end-of-life on page 107 and Cartridge maintenance on page 176. ▪ Decrease your cut speed. ▪ Make sure that the operating mode is correct for the Hypertherm cartridge that you are using. Refer to page 75. ▪ Restart the plasma power supply. Does it correctly recognize the type of Hypertherm cartridge installed? Does it correctly set the amperage and operating mode for the Hypertherm cartridge? If it does not, look at the LCD screen. Do you see the non-default configuration icon (at right)? If yes, there is possibly a system configuration setting that you must change. Refer to page 127. If no, there is possibly a problem with the Hypertherm cartridge, torch, or plasma power supply. Speak to your distributor or authorized repair facility. ▪ Make sure that the torch is being used correctly. Refer to Cut with the Hand Torch on page 93. ▪ Increase the output current (A) on the plasma power supply. Refer to page 70. ▪ If the output current (A) cannot be increased, make sure that the thickness of the metal being cut is less than the maximum capacity for this plasma power supply. Refer to Cutting specifications on page 33. ▪ Clean the area where the work clamp touches the workpiece. Remove any rust, paint, or other material. Make sure that there is good metal-to-metal contact. ▪ Examine the torch lead. Make it straight if it is twisted or kinked. Replace it if it is damaged. ▪ Examine the gas pressure and the gas supply hose. Refer to page 126. ▪ Adjust the gas flow rate. Refer to Gas supply source on page 54.
When I try to adjust the output current (A) using the button on the SmartSYNC hand torch, the amperage setting on the plasma power supply does not change.	▪ Is the system in basic mode? The amperage-adjustment control on the hand torch cannot be used when the system is in basic mode. Refer to Smart mode versus basic mode on page 155. If the status screen shows the non-default configuration icon (at right), set the plasma power supply to factory default settings to go back to smart mode. Push and hold ○ and A/ at the same time for approximately 2 seconds.

Problem	Solution
The fault LED on the hand torch flashes yellow, but no fault code or fault icon shows on the status screen.	▪ The fault LED on the hand torch flashes yellow when the system is in basic mode. When you go back to smart mode, the fault LED on the torch changes to green. Refer to Smart mode versus basic mode on page 155.

Hand gouging problems

When gouging, always make sure of the following:

- A Hypertherm gouging cartridge is installed.
- The Hypertherm cartridge is not worn or damaged. Refer to Signs that a cartridge is near end-of-life on page 107.
- The operating mode is set to Gouge mode.
  - When you install a Hypertherm gouging cartridge, the plasma power supply automatically sets the operating mode to Gouge mode. There is a condition in which the operating mode does **not** automatically set to Gouge mode even if a Hypertherm gouging cartridge is used. Refer to Smart mode versus basic mode on page 155.

Problem	Solution
The arc goes out during gouging.	▪ Decrease the arc stretch (standoff). ▪ Put the torch in a more upright position.
The torch tip hits the molten metal (slag).	▪ Increase the arc stretch (standoff). ▪ Keep the torch tip pointed in the direction of the gouge that you want to make.
The gouge has too much depth.	▪ Tilt the torch down so that it is closer to the workpiece. ▪ Increase the arc stretch (standoff). ▪ Increase the gouging speed. ▪ Decrease the output current (A). ▪ Refer to Change the gouge contour on page 114.
The gouge does not have enough depth.	▪ Put the torch in a more upright position. ▪ Decrease the arc stretch (standoff). ▪ Decrease the gouging speed. ▪ Increase the output current (A). ▪ Refer to Change the gouge contour on page 114.
The gouge has too much width.	▪ Put the torch in a more upright position. ▪ Decrease the arc stretch (standoff). ▪ Increase the gouging speed. ▪ Decrease the output current (A). ▪ Refer to Change the gouge contour on page 114.

Problem	Solution
The gouge does not have enough width.	▪ Tilt the torch down so that it is closer to the workpiece. ▪ Increase the arc stretch (standoff). ▪ Decrease the gouging speed. ▪ Increase output current (A). ▪ Refer to Change the gouge contour on page 114.

Fault codes

When a fault occurs with the plasma power supply or the torch, a fault code ❶ and related fault icon ❷ show on the status screen. The yellow fault LED ❸ also comes on.

Fault codes are in the format *N-nn-n*. The fault code value identifies the importance of the fault: the higher the number, the higher the importance. If more than one fault occurs at the same time, the fault code with the highest importance shows.

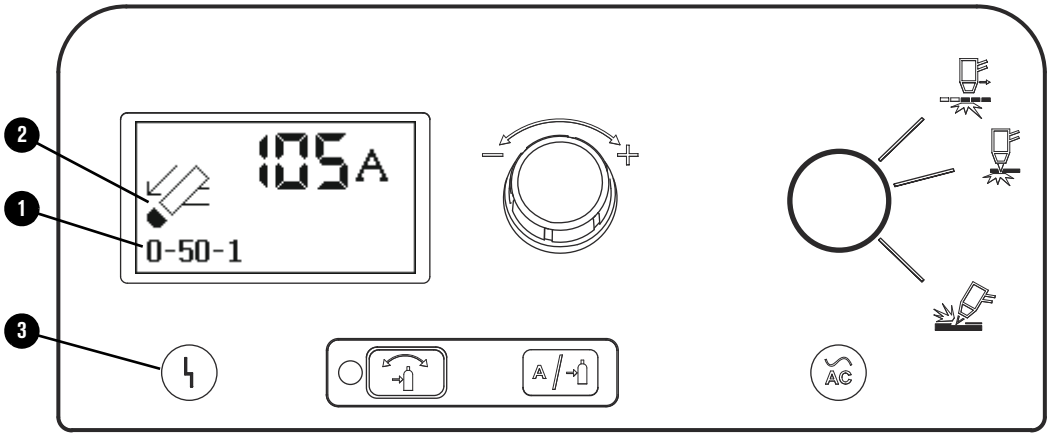

The Power Supply Log screen shows the 10 most recent faults. Refer to page 150.

The status LED on the SmartSYNC hand torch also shows the fault status.

Green = prepared to cut

Yellow = a 0-*nn-n* fault code, or the torch is locked

Red = a 0-32-0, 1-*nn-n*, 2-*nn-n*, or 3-*nn-n* fault code

Identify fault icons

Notice – This icon identifies faults that have a negative effect on cut quality or performance but do not prevent the plasma power supply from continuing to operate in most conditions. The 0-14-0 fault code shows this icon but will stop the system from operating.

Fault – This icon identifies faults that cause the plasma power supply to stop cutting.

Error – This icon identifies faults for which repair or replacement of internal components is necessary.

Torch Cap Sensor – This icon identifies when the SmartSYNC torch is in the yellow lock (**X**) position. Refer to page 69. It also identifies fault conditions in which the Hypertherm cartridge is loose, incorrectly installed, or missing.

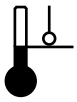

Temperature – This icon identifies fault conditions in which the plasma power supply is outside the range of permitted operating temperatures. Refer to page 22 for temperature specifications.

Gas – This icon identifies fault conditions in which the gas supply is disconnected from the plasma power supply or there is a problem with the gas supply.

Cartridge Not Recognized – This icon shows when a cartridge cannot communicate with the plasma power supply.

When a cartridge cannot communicate with the plasma power supply, the plasma power supply cannot set operating parameters or record cartridge data.

Cartridge End-of-Life – This icon shows when the cartridge is at end-of-life. Hypertherm strongly recommends that you install a new cartridge when you get this fault. Refer to page 80.

Internal Serial Communications Interface – This icon identifies faults with serial communications that occur between the LCD/control PCB and the DSP PCB.

Cartridge Communications – This icon identifies faults with wireless communications that occur between the Hypertherm cartridge and the SmartSYNC torch.

Torch Communications – This icon identifies communication faults that occur between the SmartSYNC torch and the DSP PCB in the plasma power supply.

Remove fault code conditions

Refer to the following table to identify and troubleshoot each fault condition.

A label with descriptions for many common fault codes comes with the system. Put the label on the plasma power supply or near your work area for reference.

Operational faults (0-*nn*-*n*)

Fault codes in the **0-*nn*-*n*** format identify operational faults. These faults do not show on the Power Supply Log screen.

An operational fault code can be for a notification or for a condition that stops the cutting process. Hypertherm recommends that you do the steps in the following table for all fault codes that occur.

Fault code	Fault icon	Fault LEDs	Description	Solutions
0-11-0		Flashes yellow	The remote control operating mode is incorrect or not permitted for the installed cartridge. The permitted operating modes for cutting cartridges are 1 (Cut mode) and 2 (Expanded Metal mode). The permitted operating mode for a gouging cartridge is 3 (Gouge mode).	These fault codes do not stop the system from operating. Hypertherm recommends that you do the following. There is a problem with the remote control or the software interface to the system. The system cannot interpret the operating mode, output current, or gas pressure information coming from the controller. ▪ Examine the programming code for incorrect process variables. ▪ Repair the controller.
0-11-1			The remote control output current (A) is incorrect or not permitted for the installed cartridge. The permitted values relate to the minimum and maximum output current (A) for the plasma power supply and the installed cartridge.	
0-11-2			The remote control gas pressure is incorrect or not permitted. The permitted gas pressure relates to the selected process and operating mode, and to the installed torch, torch lead, and cartridge.	

Fault code	Fault icon	Fault LEDs	Description	Solutions
0-12-1		Flashes yellow	The gas pressure output is low.	These fault codes do not stop the system from operating. Hypertherm recommends that you do the following. ▪ For **0-12-1** faults, increase the inlet gas pressure from the gas supply source. For optimum system performance, make sure that the inlet gas pressure stays between 7.6 bar – 8.3 bar (110 psi – 120 psi) while gas is flowing. For minimum inlet pressure specifications, refer to page 57. ▪ **Never exceed the maximum gas pressure of 9.3 bar (135 psi).** Refer to Inlet gas pressure requirements (while gas is flowing) on page 57. ▪ Make sure that none of the gas lines are kinked or blocked. ▪ Do a gas test to see if the plasma power supply's actual output gas pressure is lower than the set pressure by more than an acceptable quantity. Refer to Do a gas test on page 151. ▪ Have a qualified service technician examine the solenoid valve inside the plasma power supply. Speak to your distributor or authorized repair facility.
0-12-2			The gas pressure output is high.	
0-12-3			The gas pressure output is not stable.	
0-13-0		Yellow Flashes green Flashes yellow	The alternating current (AC) input power is not stable.	This fault code does not stop the system from operating. In some conditions, the system can operate at a decreased capacity. Hypertherm recommends that you do the following. ▪ Do a cold restart. ▪ If applicable, disconnect the system from generator power. Refer to Troubleshoot power-related problems with generators on page 148. ▪ If you continue to get this fault, have an electrical technician correct the power source. Refer to page 38.

Fault code	Fault icon	Fault LEDs	Description	Solutions
0-14-0		Yellow Flashes yellow	There is a problem with the cartridge installation.	This fault shows when you install a cartridge, and it cannot send data to the plasma power supply. This fault code stops the system from operating. Do one of the following: ▪ Set the torch-lock switch to the yellow lock (**X**) position and then back to the green "ready to fire" (✓) position. ▪ Do a quick restart. ▪ Install the cartridge again. Electrical noise can cause a bad data connection. For example, high frequency electrical noise from TIG welders can cause interference. Keep electrical noise in the work area as low as possible. If you do not remove this fault code, the system automatically adjusts the following settings to prevent possible damage to the workpiece and cartridge: ▪ It sets the output current to 45 A. ▪ It sets the operating mode to Cut mode. ▪ It sets the output gas pressure to cut pressure. If necessary, you can manually change these settings to cut without a data connection.
0-14-1		Flashes yellow	The cartridge is not recognized.	This fault shows when a cartridge cannot send data to the plasma power supply for some reason. This fault code does not stop the system from operating. ▪ When this fault occurs, you can continue to cut or gouge, but **you must set the output current (A) and the operating mode manually**. Also, the system cannot collect data about the Hypertherm cartridge. ▪ Lightly blow air into the cartridge to remove all dust or other contamination. Install the cartridge again. ▪ Make sure that the green ring inside the cartridge is not broken. 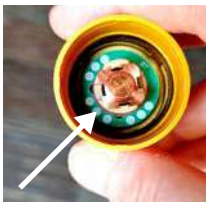

Fault code	Fault icon	Fault LEDs	Description	Solutions
0-19-9		Yellow Flashes yellow	The input power stopped. Or, power PCB hardware protection occurred for components in the plasma power supply.	This fault code stops the system from operating. Do the following. ▪ This fault can be the result of electrical noise. Wait for the fault to go away, and continue to cut. ▪ If you use serial communications, this fault can occur temporarily on the CNC when you set the plasma power supply to OFF (**O**). Wait for 1 minute for the fault to go away on its own. ▪ If this fault continues to occur, it can identify a possible hardware fault with an internal component., and you can see a A hardware fault shows as a 1-*nn-n*, 2-*nn-n*, or 3-*nn-n* fault code. A qualified service technician must repair the system. Speak to your distributor or authorized repair facility.
0-20-0		Yellow Yellow	The gas pressure is lower than the minimum pressure for the selected process, operating mode, torch, lead length, and Hypertherm cartridge type.	This fault code does not stop the system from operating. Do the following. ▪ Examine all the connections for the input gas supply. Make sure that there are no leaks or loose connections. ▪ Make sure that the incoming gas supply hose has an internal diameter of 10 mm (3/8 inch) or greater if the hose is less than 15 m (50 feet). For hoses that are 15 m – 30 m (50 feet – 100 feet), use an internal diameter of 13 mm (1/2 inch) or greater. ▪ Make sure that there is sufficient inlet gas pressure from the gas supply source. Refer to Inlet gas pressure requirements (while gas is flowing) on page 57. ▪ Manually adjust the gas pressure on the plasma power supply. Refer to page 74. ▪ Do a gas test to see if the plasma power supply's actual output gas pressure is lower than the set pressure by more than an acceptable quantity. Refer to page 151. ▪ If there is no apparent problem with the inlet gas supply, examine the air filter bowl and air filter element in the plasma power supply. Clean or replace as necessary. Refer to page 177. ▪ If you continue to get this fault condition, have an authorized service technician examine the system. Speak to your distributor or authorized repair facility.

Fault code	Fault icon	Fault LEDs	Description	Solutions
0-21-0		Yellow Yellow	The gas flow stopped during cutting (an excessive change to arc voltage occurred).	This fault code stops the system from operating. The fault code goes away the next time that you fire the torch unless there is a condition that prevents the torch from firing, such as a kink or blockage in the torch lead. Do the following. ▪ Make sure that the correct gas inlet pressure is available. ▪ Make sure that none of the gas lines are kinked or blocked. ▪ Make sure that the torch lead is not leaking. Also make sure that it is not kinked or twisted. ▪ Install a new Hypertherm cartridge. ▪ For mechanized applications, lock out the torch height control.
0-22-0		Yellow Yellow	There is no gas supply input.	This fault code stops the system from operating. The fault code goes away when you connect the gas supply to the plasma power supply unless there is a blockage in the gas line. Do the following. ▪ Make sure that the input gas supply is connected correctly to the plasma power supply. ▪ Examine all the connections for the input gas supply. Make sure that there are no blockages in the gas line. Make sure that there are no leaks or loose connections. ▪ Restart the plasma power supply.

Fault code	Fault icon	Fault LEDs	Description	Solutions
0-30-0		Yellow	There is a torch stuck open (TSO) condition. The nozzle and electrode components inside the Hypertherm cartridge are not touching after a Start signal is received.	These fault codes stop the torch from firing a plasma arc. In some conditions, you can fire the torch again and continue to cut. **If the fault occurred when you first installed the cartridge and tried to fire the torch, do the following:** ▪ If the Hypertherm cartridge became loose or was removed while the plasma power supply was ON and the torch-lock switch was set to the green “ready to fire” position (✓), set the power switch on the plasma power supply to OFF (**O**), correct the problem, and set the power switch to ON (**I**) to remove the fault. ▪ Examine the Hypertherm cartridge. Make sure that it is not worn or damaged. Refer to Signs that a cartridge is near end-of-life on page 107 and Cartridge maintenance on page 176. ▪ **Hand torch:** Move the torch-lock switch to the yellow lock (**X**) position, then move the torch-lock switch to the green “ready to fire” (✓) position. Fire the torch 1 time to get the warning puffs of air. This can clean away unwanted material that has collected around the tip of the cartridge. ▪ Remove the cartridge and carefully shake it to remove unwanted material that has collected inside the cartridge. This material can cause 0-30-0 faults to occur. A higher rate of 0-30-0 faults is typical as a cartridge gets near end-of-life. ▪ Install a new Hypertherm cartridge. **If the fault occurred during postflow or during a cut, do the following:** ▪ Examine the gas line. Refer to Examine the gas pressure on page 126 and Examine the gas quality on page 127. ▪ If the Hypertherm cartridge is in good condition and is installed correctly, the torch has possible damage. Speak to your distributor or authorized repair facility.Examine the torch for damage and for conditions that can prevent correct gas flow. Refer to Troubleshoot 0-30-0 fault codes that occur during postflow on page 149.
0-30-1		Yellow	There is a torch stuck closed (TSC) condition. The nozzle and electrode components inside the Hypertherm cartridge will not disconnect from each other after a Start signal is received.	

Fault code	Fault icon	Fault LEDs	Description	Solutions
0-32-0		Yellow Red	The system sensed that the cartridge in use is at end-of-life.	This fault code stops the system from operating. Install a new cartridge to remove the fault condition. ▪ If you restart the plasma power supply and try to use the same cartridge, the 0-32-1 fault code shows to remind you that the cartridge is at end-of-life. **Hypertherm strongly recommends that you install a new cartridge.** Refer to When to replace the cartridge (fault code 0-32-n) on page 80.
0-32-1		Yellow Flashes yellow	A cartridge is installed that had the 0-32-0 fault before and is at end-of-life.	This fault code does not stop the system from operating. ▪ The 0-32-1 fault code reminds you that the cartridge is at end-of-life. **Hypertherm strongly recommends that you install a new cartridge.** Refer to When to replace the cartridge (fault code 0-32-n) on page 80.
0-40-0		Yellow Yellow	The boost power-factor correction insulated-gate bipolar-transistor (PFC IGBT) is too cold. This is applicable to CSA and to Powermax105 SYNC 230 V – 400 V CE models only.	These fault codes stop the system from operating. Do the following. You can continue to use the system when its internal temperature is no longer too hot or too cold. Hypertherm recommends that you operate the system only in external temperatures between -10°C to 40°C (14°F to 104°F). ▪ The system is possibly overheated. Keep the plasma power supply ON to let the fan decrease the temperature of the internal components. Refer to Prevent overheating on page 81. ▪ Make sure that there is sufficient air flow around the plasma power supply. ▪ Make sure that the plasma power supply cover is installed with the louvers in front of the fan. ▪ The system is possibly too cold to operate. If the internal temperature of the plasma power supply gets near -30°C (-22°F), move the system to a warmer location.
0-40-1			The boost PFC IGBT is too hot. This is applicable to CSA and to Powermax105 SYNC 230 V – 400 V CE models only.	
0-40-2			The inverter IGBT is too cold.	
0-40-3			The inverter IGBT is too hot.	

Fault code	Fault icon	Fault LEDs	Description	Solutions
0-50-0		Yellow Yellow	The cartridge is off, the torch was disconnected, or the torch was in the yellow lock (**X**) position during a restart.	This fault code stops the system from operating. Do the following. ▪ This fault code shows when you do a restart while the torch-lock switch is in the yellow lock (**X**) position. Move the torch-lock switch to the green "ready to fire" (✓) position to continue. Refer to fault code **0-50-1** below. ▪ This fault code also shows if the torch is disconnected when you set the plasma power supply to ON (**I**). Connect the torch to the plasma power supply. Do a quick restart. ▪ This fault code also shows when a cartridge is not installed correctly. Remove the Hypertherm cartridge and install it correctly. ▪ **Machine torch:** This fault code shows when you remove the cartridge without first setting the power switch to OFF (**O**) or moving the torch-lock switch to the yellow lock (**X**) position. Lock and unlock the torch, or do a quick restart. ▪ **Mini machine torch:** This fault code can show if you change the cartridge while the power switch on the plasma power supply is set to ON (**I**). Do a quick restart. ▪ If the Hypertherm cartridge is in good condition and is installed correctly, the torch has possible damage. Speak to your distributor or authorized repair facility.
0-50-1		Yellow Yellow	The torch-lock switch is set to the yellow lock (**X**) position.	This fault code stops the system from operating. Do the following. A restart is not necessary. ▪ **Hand torch:** Move the torch-lock switch to the green "ready to fire" (✓) position. Fire the torch 1 time to get the warning puffs of air. Fire the torch again to get a plasma arc. Refer to page 68. ▪ **Machine torch:** Move the torch-lock switch to the green "ready to fire" (✓) position. Fire the torch to get a plasma arc. ▪ **Mini machine torch:** This fault code is not applicable to the mini machine torch.

Fault code	Fault icon	Fault LEDs	Description	Solutions
0-50-2	none	Yellow	The torch-lock switch is set to the green “ready to fire” (✓) position, but the torch is not prepared to fire.	This fault code identifies a condition in which an additional step is necessary *for hand torches* before the hand torch will fire a plasma arc. ▪ When you move the torch-lock switch to the green “ready to fire” (✓) position, the fault code changes from 0-50-1 to 0-50-2, and the icon goes off. ▪ **Hand torch:** Fire the torch 1 time to get the warning puffs of air. The 0-50-2 fault code goes off, and the LED on the hand torch changes from yellow to green. The torch is now prepared to fire a plasma arc. ▪ **Machine torch:** The 0-50-2 fault code shows for approximately 1 second and then goes off. Fire the torch to get a plasma arc. There are no warning puffs of air. If the 0-50-2 fault code does not go off, send a STOP signal from the CNC to remove the fault. ▪ **Mini machine torch:** This fault code is not applicable to the mini machine torch.
0-50-3	none	Yellow	The system is reading data from the cartridge.	This fault code flashes quickly while the system reads configuration data from the cartridge. Wait for the fault code to go away on its own. ▪ **The system will not cut until the fault code goes away.** ▪ This fault code can show for up to 6 seconds if electrical noise causes interference with the data connection. ▪ If the system cannot read the data from the cartridge, a different fault code will show. ▪ **Hand torch:** The usual behavior is to see a 0-50-2 fault code after 0-50-3 goes away. Fire the torch 1 time to get the warning puffs of air. The 0-50-2 fault code goes away. The torch is now prepared to fire a plasma arc.
0-51-0		Yellow Yellow	The plasma power supply was receiving a signal to start cutting at the same time that the power switch was set to ON (**I**). With a machine torch, this condition is sometimes referred to as a “stuck start.”	This fault code stops the system from operating. Do the following. A quick restart is necessary. ▪ **Hand torch:** The torch trigger was being held in the “fire” position when the power switch on the plasma power supply was set to ON (**I**). Release the trigger and do a quick restart of the plasma power supply. ▪ **Machine torch:** The plasma power supply was receiving a Start signal when the power switch was set to ON (**I**). Set the Start signal to off, and do a quick restart of the plasma power supply.

Fault code	Fault icon	Fault LEDs	Description	Solutions
0-52-0		Yellow Yellow	The torch is not connected.	This fault code stops the system from operating. Do the following. A quick restart is necessary. ▪ Make sure that the torch lead is correctly connected to the FastConnect receptacle on the front of the plasma power supply. Do a quick restart. ▪ If you disconnect the torch while the plasma power supply is set to ON (**I**), you get the 0-52-0 fault code. ▪ If you disconnect the torch while the plasma power supply is set to OFF (**O**), you get the 0-50-0 fault code the next time you set the plasma power supply to ON (**I**).
0-60-0	AC	Yellow Yellow	An AC input voltage phase loss occurred. This is applicable only to CE models and to Powermax105 SYNC CSA models.	This fault code stops the system from operating. Do the following. A cold restart is necessary. ▪ Have an electrical technician examine all input phases and fuses/breakers for correct voltage at the power source and at the plasma power supply. ▪ If applicable, disconnect the system from generator power, or set the generator mode feature to on. Refer to Troubleshoot power-related problems with generators on page 148.
0-60-1	AC	Yellow Yellow	An AC input voltage is too low.	This fault code stops the system from operating. Do the following. A cold restart is necessary. ▪ The input line voltage is too low (more than 15% below the rated voltage). Have an electrical technician examine the line and increase the voltage. Refer to page 22 and page 40. ▪ If applicable, disconnect the system from generator power, or set the generator mode feature to on. Refer to Troubleshoot power-related problems with generators on page 148.
0-60-2	AC	Yellow Yellow	An AC input voltage is too high.	This fault code stops the system from operating. Do the following. A cold restart is necessary. ▪ The input line voltage is too high (more than 10% above the rated voltage). Have an electrical technician examine the line and decrease the voltage. Refer to page 22 and page 40. ▪ If applicable, disconnect the system from generator power, or set the generator mode feature to on. Refer to Troubleshoot power-related problems with generators on page 148.

Fault code	Fault icon	Fault LEDs	Description	Solutions
0-61-0		Yellow Yellow	An AC input is not stable. Shut down the system.	This fault code stops the system from operating. Do the following. A cold restart is necessary. ▪ The current from the incoming power line is unstable. Stop power to the system and correct the line resonance problem before continuing. ▪ If possible, connect the system to a different AC power source. ▪ Make sure that the plasma power supply is not being used on a phase converter. ▪ If applicable, disconnect the system from generator power, or set the generator mode feature to on. Refer to Troubleshoot power-related problems with generators on page 148.
0-98-0	LCD DSP	Yellow Yellow	An internal communication failure occurred between the LCD/control PCB and the DSP PCB.	This fault code does not stop the system from operating. The system can continue to cut, but Hypertherm recommends that you find the cause of the problem first because the controls on the front panel are not available. Do the following: ▪ Set the power switch on the plasma power supply to OFF (**O**). Wait until all the amperage LEDs on the SmartSYNC hand torch go off. (Or, wait approximately 1 minute.) Set the power switch to ON (**I**). If the problem continues, a qualified service technician must open the plasma power supply and examine the ribbon cable between the LCD/control PCB and the DSP PCB.

Fault code	Fault icon	Fault LEDs	Description	Solutions
0-98-1		Yellow	An RF communication failure occurred between the cartridge and the torch.	This fault code does not stop the system from operating. Hypertherm recommends that you do the following. When this fault occurs, the Hypertherm cartridge is not sending data to the system, so the system cannot collect data about the cartridge. The problem can be with the Hypertherm cartridge or with the SmartSYNC torch. You can continue to cut or gouge, but **you must set the output current (A) and the operating mode manually**. **Cartridge:** ▪ Make sure that the Hypertherm cartridge is installed correctly. ▪ Make sure that the green ring inside the cartridge is not broken. 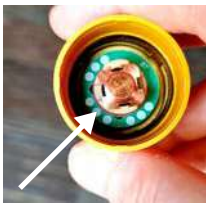 ▪ If you have a Hypertherm cartridge reader (528083), do a test to identify if the reader can pull data from the cartridge. ▪ Install a new Hypertherm cartridge. **Torch:** ▪ If a new Hypertherm cartridge does not remove the fault condition, a component in the SmartSYNC torch has possible damage. A qualified service technician must examine the torch. Speak to your distributor or authorized repair facility.
0-98-2		Flashes yellow	A communication failure occurred between the torch and the plasma power supply.	This fault code does not stop the system from operating. Hypertherm recommends that you do the following. When this fault occurs, the SmartSYNC torch is not sending data to the plasma power supply, so the system cannot collect data about the Hypertherm cartridge. The problem can be with the torch or with the plasma power supply. A qualified service technician must identify the source of the fault and repair the component that is damaged. Speak to your distributor or authorized repair facility. You can continue to cut or gouge, but **you must set the output current (A) and the operating mode manually**.

Internal component faults (1-*nn-n*, 2-*nn-n*, 3-*nn-n*)

Fault codes in the 1-*nn-n*, 2-*nn-n*, and 3-*nn-n* formats identify possible damage to components inside the plasma power supply. These faults show on the Power Supply Log screen.

Fault code	Fault icon	Fault LEDs	Description	Solutions
1-*nn-n* **2-*nn-n*** **3-*nn-n***		Yellow Red	A major fault occurred.	These fault codes stop the system from operating. Do the following. ▪ Do a cold restart. In some conditions, a restart can remove the fault condition. ▪ If restarting the plasma power supply does not remove the fault condition, a qualified service technician must repair the system. Speak to your distributor or authorized repair facility.

Troubleshoot power-related problems with generators

- If a fault occurs while you are using a generator, it is possible that doing a quick restart does not remove the fault condition. Instead, set the power switch on the plasma power supply to OFF (**O**) and wait approximately 1 minute before setting the power switch to ON (**I**).
- Problems with input line voltage (fault codes 0-13-0, 0-60-*n*, and 0-61-0) can occur more frequently with some generators. If you consistently see these fault codes, you can temporarily set the **GEN** setting to on. This setting is on the Feature Configuration screen (**FEATURE CONFIG**). **Hypertherm recommends that only experienced operators change this setting.** This setting decreases the system's sensitivity to changes in current and voltage from incoming power. Refer to page 153.
  - Make sure that you set the **GEN** field to off when you are not using a generator.
- If you continue to have problems with input line voltage, disconnect the plasma power supply from the generator, and connect it to a power receptacle with sufficient power.
  - Refer to page 50 for generator specifications.

Troubleshoot 0-30-0 fault codes that occur during postflow

A start signal during postflow causes the remaining air pressure in the torch lead to quickly drop. If the pressure does not drop quickly enough, the electrode may not return to its closed position in time to form the pilot arc. A 0-30-0 error occurs.

If you try to fire the torch during postflow and get a 0-30-0 error, do the following steps. **After each step, try to fire the torch again**.

1. Reset the torch.
   - Move the torch lock switch to the LOCK position and then back to the "ready to fire" position.
2. Try a different cartridge.
   - Refer to Install the cartridge on page 66.
3. Do an inspection of the torch lead.
   - If the torch lead is installed in a track, remove the torch lead from the track.
   - Does the torch lead have any kinks or bends? Do not bend the torch lead around a radius that is less than the minimum bend radius of 76 mm (3.0 inches).
   - Are there cable ties around the torch lead that are too tight?
   - Are there any signs of a gas leak?

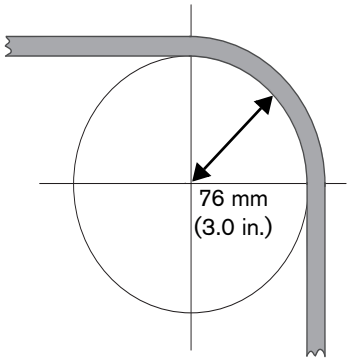

4. Do a gas pressure test.
   - Refer to Do a gas test on page 151.
   - Refer to Inlet gas pressure requirements (while gas is flowing) on page 57.
5. Do a continuity check on the torch lead with a cartridge installed.
   a. Make sure that a cartridge is installed on the torch and that the torch is **not** connected to the plasma power supply.
   b. Do a check for continuity between pin 1 in the torch connector and the nozzle on the cartridge.
   c. Do a check for continuity between pin 2 in the torch connector and the nozzle on the cartridge.
   - Is there continuity on both pins?
     - If yes, there may be a problem with the plasma power supply instead of the torch. Speak to your distributor or authorized repair facility.
     - If no, it is possible that a new torch lead is necessary.

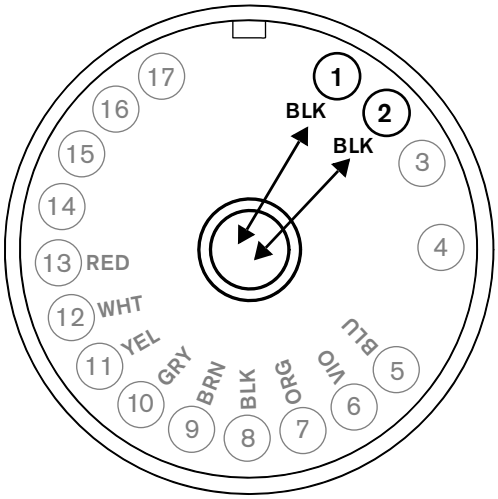

See recent fault codes (Power Supply Log screen)

Go to the Power Supply Log screen (**POWER SUPPLY LOG**) to see the 10 most recent internal component faults that have occurred on the plasma power supply. This is a service screen that helps to identify possible damage to components inside the plasma power supply.

The plasma power supply does not show operational fault codes (0-*nn*-*n*) on this screen.

1. Select ³ on the main menu screen.
2. Select ¹ to go to the **POWER SUPPLY LOG** screen.
3. Turn the adjustment knob to move through the list.

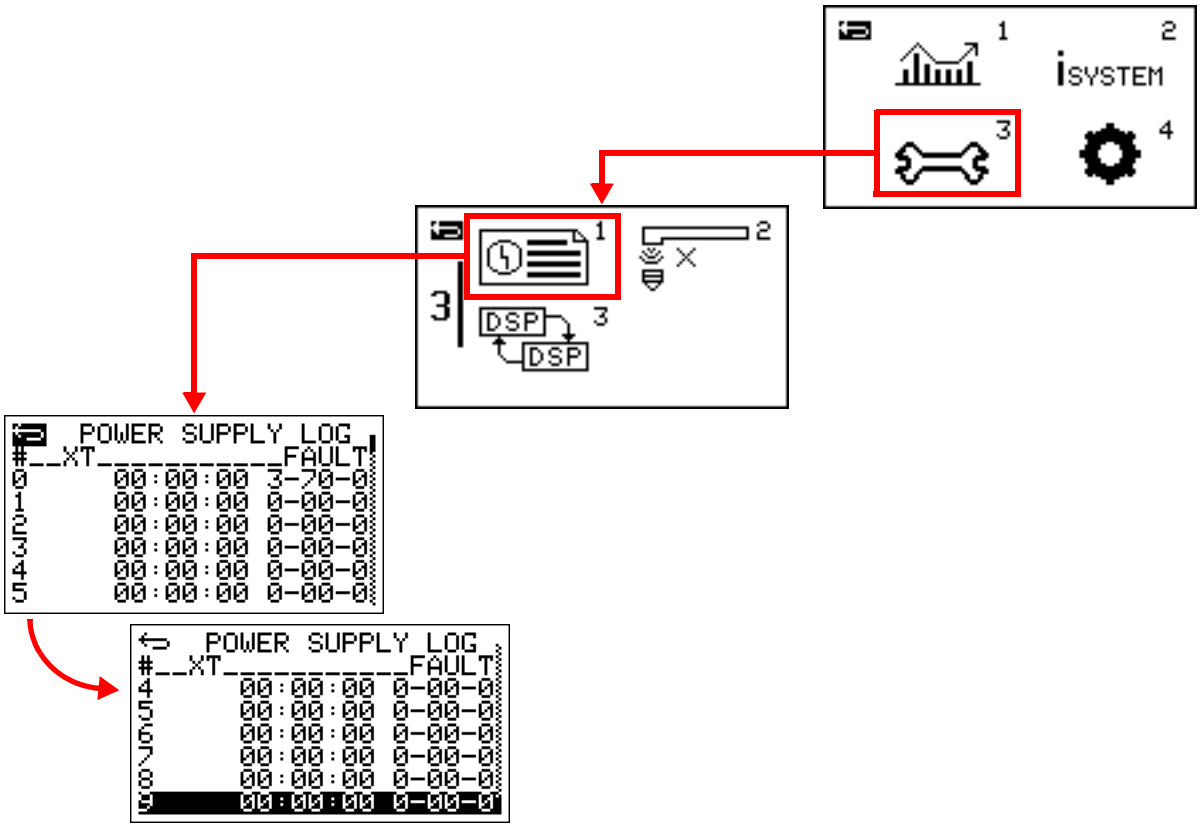

 # – This field shows the list of fault codes numbered **0** – **9**, starting with the most recent faults.

XT – This field shows when each fault occurred. The value is a timestamp in hours (HH), minutes (MM), and seconds (SS): *HH*:*MM*:*SS*. This value is related to the **XT** field on the Power Supply Data screen (**POWER SUPPLY DATA**). Refer to page 162. The timestamp shows when the fault occurred in relation to the cumulative arc transfer time for the plasma power supply.

FAULT – This field shows the fault code number that identifies each fault. The format is *N-nn-n*. Refer to page 132.

Do a gas test

Do a gas test to make sure that sufficient gas pressure is getting to the torch.

⚠ WARNING

CHANCE OF BURNS AND CUTS

Point the torch away from you before doing a gas test. Always keep hands, clothes, and objects away from the torch tip. Never point the torch toward yourself or others.

Start and stop a gas test in automatic gas pressure mode

1. Set the SmartSYNC torch to the green “ready to fire” (✔) position.
2. **Hand torches:** Fire the torch 1 time to get the warning puffs of air.
3. Make sure that the correct operating mode is selected for the process that you want to examine: Cut mode, Gouge mode, or Expanded Metal mode.
4. Push and hold the operating mode button for 2 seconds until the gas test screen shows.

   Gas flows continuously from the torch when the plasma power supply is in gas test mode.

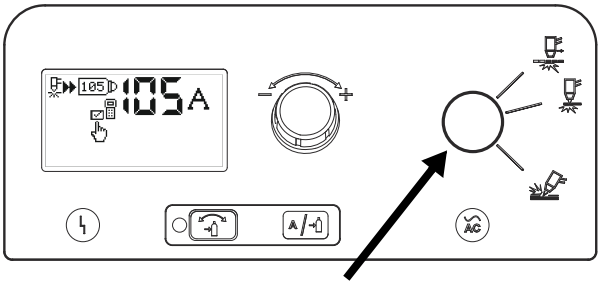

Push and hold for 2 seconds.

5. Use the gas test screen to compare the plasma power supply's actual output gas pressure ❶ to the gas pressure that the system sets ❷ to align with the type of cartridge and torch installed.

   For the system to operate optimally, the output gas pressure ❶ must not be lower than the system's target gas pressure ❷ by more than the following quantities:

   - Cut mode at 105 A: -0.3 bar (-5 psi)
   - Cut mode at 85 A: -0.3 bar (-4 psi)
   - Cut mode at 65 A: -0.2 bar (-3 psi)
   - Cut mode at 45 A: -0.1 bar (-2 psi)
   - Gouge mode at 45 A – 105 A: -0.1 bar (-2 psi)

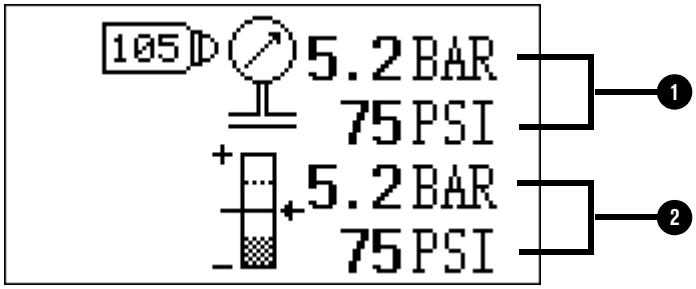

6. Push the operating mode button to stop the gas test and go back to the status screen. Gas stops flowing from the torch.

7. If the output gas pressure was too low in step 5, examine the inlet pressure from the gas supply source. For inlet pressure requirements, refer to Optimum inlet pressure on page 57.

   It is also possible that the solenoid valve electronic regulator must be replaced by a qualified service technician. Speak to your distributor or authorized repair facility.

Do a gas test in manual gas pressure mode

If the plasma power supply is in manual gas pressure mode when you start a gas test, the gas test screen shows the plasma power supply's actual output gas pressure ❶ and the manual gas pressure setting ❷.

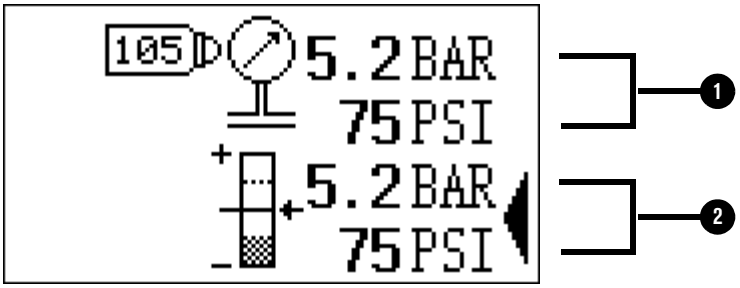

You can turn the adjustment knob to change the manual gas pressure setting during a gas test.

You can push during a gas test to change from manual gas pressure mode to automatic gas pressure mode or from automatic gas pressure mode to manual gas pressure mode.

Adjust system settings on the Feature Configuration screen

Go to the Feature Configuration screen (**FEATURE CONFIG**) to change system settings. **Changing these fields from their default settings is recommended only for experienced operators.**

Changing one of these fields from the default setting causes the non-default configuration icon (at right) to show on the status screen.

By default, this screen is locked. To change any of the settings on this screen, you must first unlock the screen using the icon.

1. Push and hold for 2 seconds to go to the main menu screen.
2. Select 4 on the main menu screen.
3. Select 3 to go to the **FEATURE CONFIG** screen.
4. Turn the adjustment knob to go to the field.
5. Push to select the field.
6. Turn the adjustment knob to set the field to the unlock position: : .
7. Push to apply the unlock setting.
8. Turn the adjustment knob to go to another field on the screen.
9. Push to select the field.
10. Turn the adjustment knob to change the value for the selected field.
11. Push to keep the new value.

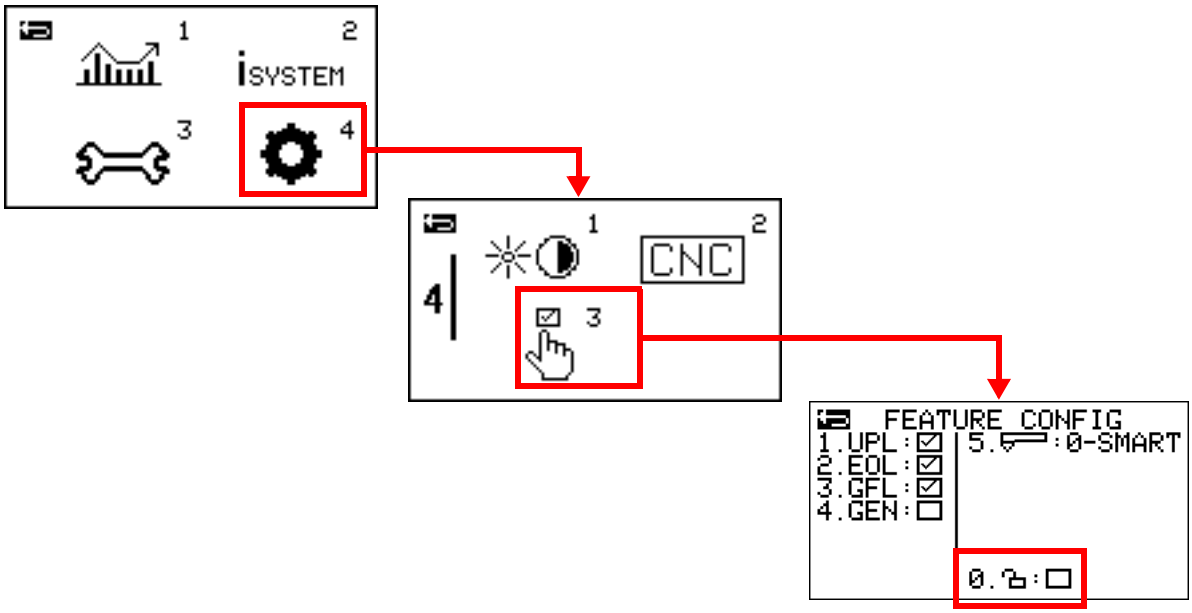

UPL – Set the low gas pressure detection feature to on or off. When you set this field to off, the system no longer shows the 0-20-0 fault code. For information on fault codes, refer to page 132. This field is on by default.

Hypertherm recommends that you keep this field on. But you can set it to off if the inlet gas pressure at your work site is not stable or if it stays low enough that you get frequent 0-20-0 faults.

Setting this field to off can cause decreased cut quality and cartridge life. If the input gas pressure goes too low, damage to the torch and the cartridge can be the result.

EOL – Set the Hypertherm cartridge end-of-life (**EOL**) detection feature to on or off. When you set this field to off, the system no longer shows the 0-32-0 or 0-32-1 fault codes when the cartridge gets to end-of-life. Refer to page 80.

This field is on by default. But the system temporarily sets the feature to off when any one of the following conditions occurs:

- You install a FineCut hand cutting cartridge.
- You set the output current below 40 A for any Hypertherm cartridge.

GFL – Do not use this setting. It is reserved for future development.

GEN – Set the generator mode feature to on or off. When you set this field to on, the system decreases its sensitivity to changes in current and voltage from incoming power, which can cause fault conditions. Refer to page 148. These changes in input power are common with some generators. This field is off by default.

Hypertherm recommends that you keep this field off. Setting this field to on can increase the risk of the plasma power supply overheating.

Make sure that you set this field to off when you are not using a generator.

– Set the Hypertherm cartridge data and SmartSYNC data detection feature to on or off. This feature is referred to as *smart mode*. This field contains the following settings:

- **0-SMART** = Smart mode. This is the default setting.
- **1-TORCH** = Torch mode. Do not use this setting. It is reserved for future development.
- **2-BASIC** = Basic mode.

Hypertherm recommends that you only use smart mode. Refer to Smart mode versus basic mode on page 155.

Smart mode versus basic mode

By default the system is in smart mode. Hypertherm recommends that you keep the system in smart mode. But very experienced operators can use basic mode to help with troubleshooting if necessary. To go into basic mode, set the field to **BASIC**. Refer to page 153.

When there is no cartridge communication with the plasma power supply, or when torch communication with the plasma power supply is broken, the system operates as if it is in basic mode, regardless of the setting in the field.

Smart mode

When the system is in smart mode and you use a Hypertherm cartridge with a SmartSYNC torch, the system does many things for you automatically, including the following:

- It sets the operating mode and the output current (A) to the correct settings for your Hypertherm cartridge. For example, if you install a 65 A gouging cartridge, the system automatically goes into Gouge mode and sets the amperage to 65 A.
- It records use data for the Hypertherm cartridge and for the plasma power supply. You can see cartridge data on the **CARTRIDGE DATA** screen. Refer to page 77. You can see plasma power supply data on the **POWER SUPPLY DATA** screen. Refer to page 162.
- It adjusts the gas pressure to the correct settings for your Hypertherm cartridge and torch.

When the system is in smart mode and you use a Hypertherm cartridge with a SmartSYNC torch, the system process icon (at right) shows on the status screen.

Basic mode

When the system is in basic mode, it does not set the operating mode or the output current (A) for you. You must adjust those settings manually.

When the system is in basic mode, the non-default configuration icon (at right) shows on the status screen Set system settings to factory default

System behavior also changes in the following ways:

- The system does not record data on pilot arcs or arc transfers for the cartridge. The system also does not record some data for the plasma power supply.
- Cartridge end-of-life detection is disabled when the output current (A) is below 55 A for any type of Hypertherm cartridge.
- The fault LED on the hand torch flashes yellow for as long as the system is in basic mode.
- The amperage-adjustment control on the hand torch does not adjust the amperage for as long as the system is in basic mode.
- You must set the plasma power supply to OFF (O) before you remove the cartridge or move the torch-lock switch to the yellow “lock” position. Otherwise you will get a 0-50-0 fault and the torch will not fire.

  To install or change a SYNC cartridge while in basic mode, or to clear a 0-50-0 fault:

  - Set the power switch on the plasma power supply to OFF (O).
  - Install a cartridge.
  - Move the trigger to the green "ready to fire" position.
  - Set the power switch to ON (I).

Set system settings to factory default

To set the plasma power supply to factory default settings, do the following. You can do these steps on all screens.

1. Push and hold ○ and A/ at the same time for approximately 2 seconds until the **FACTORY RESET?** message shows.

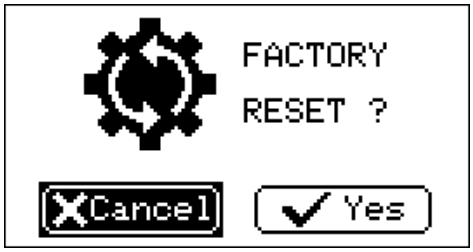

2. Turn the adjustment knob to go to [Yes], and push [A/⏻] to select it. The system goes back to factory default settings, as follows:

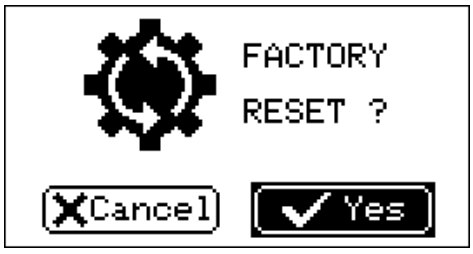

   - The brightness, contrast, and CNC interface fields go back to their default settings.
   - All of the fields on the Feature Configuration (**FEATURE CONFIG**) screen go back to their default settings.
   - The non-default configuration icon (at right) no longer shows on the status screen.

   - If you have a Hypertherm cartridge on a SmartSYNC torch, the system process icon (at right) shows on the status screen.

   - The system goes back to the factory default settings for the cartridge installed on the torch. These settings are for output current (A) and operating mode.

See system information

From the menu screens, you can go to the following service screens to see information about your plasma power supply, torch, and cartridge:

- Cartridge Data screen on page 160
- Power Supply Data screen on page 162
- Cartridge History screen on page 164
- LCD/Control PCB Information screen on page 165
- DSP PCB and Power PCB Information screen on page 166
- Torch PCB Information screen on page 167
- Radio Frequency (RF) Data screen on page 168
- Cut Counters Transfer screen on page 169
- CNC Interface Settings screen on page 170

For information on fault codes, refer to See recent fault codes (Power Supply Log screen) on page 150.

1. To go to the main menu screen, push and hold A/⌂ for 2 seconds.
2. Turn the adjustment knob to go to an icon on the screen.
3. Push A/⌂ to select the icon.

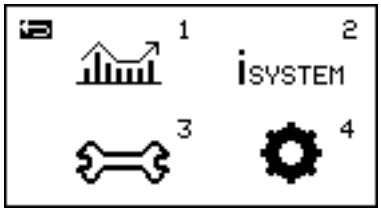

1 **Cartridge and plasma power supply data –** Select this icon to go to use data and other information about the Hypertherm cartridge and the plasma power supply. Refer to page 89.

iSYSTEM 2 **System information –** Select this icon to go to service-related information about printed circuit boards (PCBs) in the plasma power supply and in the SmartSYNC torch. Refer to page 90.

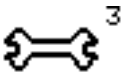

Service – Select this icon to go to service-related information about fault codes, radio frequency (RF) settings and logs, and cut counter transfers. Refer to page 91.

Settings – Select this icon to go to system settings that you can change, such as the brightness and contrast of the LCD screen. Refer to page 92.

Back – Select this icon to go back to the screen you were on before.

Tip: Push the ○ button to immediately go back to the status screen.

Cartridge Data screen

Go to the Cartridge Data screen (**CARTRIDGE DATA**) to see information about the Hypertherm cartridge that is installed on the torch.

1. Select [1] on the main menu screen.
2. Select [1] to go to the **CARTRIDGE DATA 1** screen.
3. Turn the adjustment knob to scroll down and see the **CARTRIDGE DATA 2** screen.

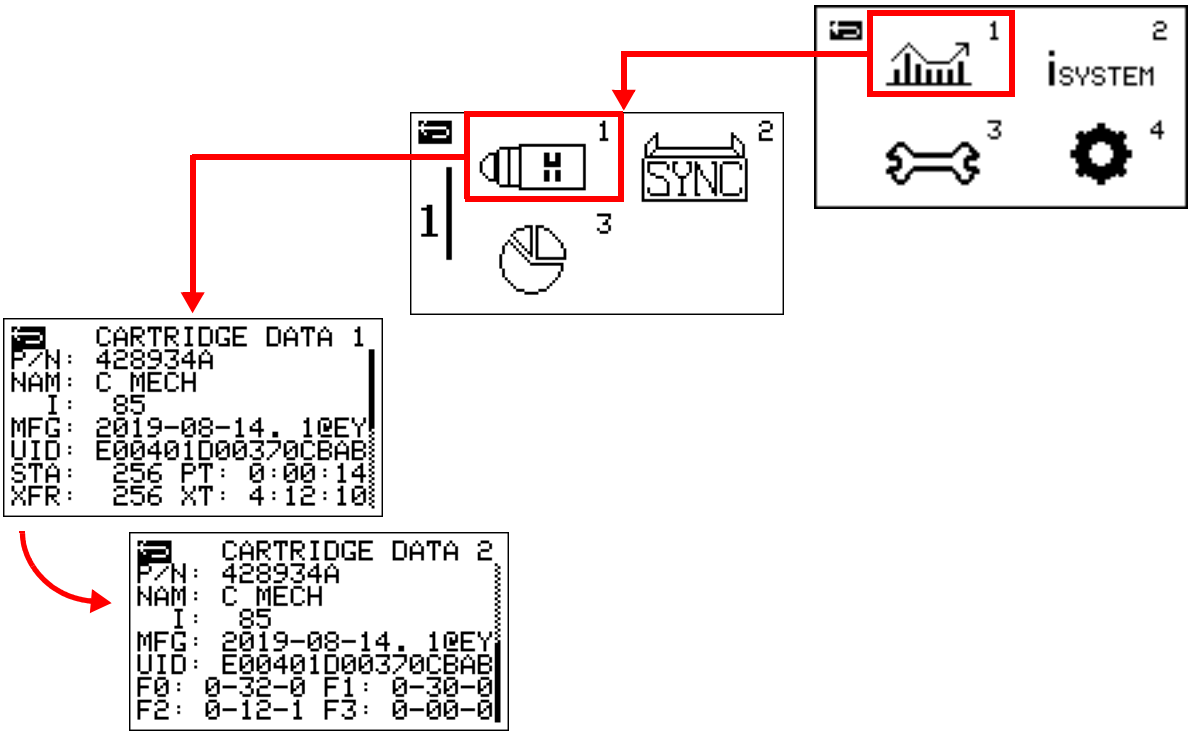

P/N – This field shows the part number (*nnnnnn*) and the version (*X*) of the Hypertherm cartridge.

NAM – This field shows the Hypertherm cartridge type.

- **C HAND** = Standard cutting cartridge for hand torch
- **C HFNC** = FineCut cartridge for hand torch
- **C MECH** = Standard cutting cartridge for machine torch
- **C MFNC** = FineCut cartridge for machine torch
- **C FLUSH** = FlushCut cartridge
- **G RMVL** = Maximum Removal gouging cartridge
- **G CNTL** = Maximum Control gouging cartridge

I – This field shows the amperage for which the Hypertherm cartridge is rated.

MFG – This field shows the manufacture date of the Hypertherm cartridge in year-month-day format (*YYYY-MM-DD*) followed by the manufacturer identification number (*.nn*) and the manufacture location code (*@nn*).

UID – This field shows the unique identification number of the Hypertherm cartridge.

STA – This field shows the total number of pilot arc starts that the Hypertherm cartridge has done in its life.

XFR – This field shows the total number of arc transfers that the Hypertherm cartridge has done in its life.

PT – This field shows the cumulative pilot arc time in hours, minutes, and seconds (*HH:MM:SS*) that the Hypertherm cartridge has had in its life.

XT – This field shows the cumulative arc transfer time in hours, minutes, and seconds (*HH:MM:SS*) that the Hypertherm cartridge has had in its life.

F0, F1, F2, F3 – These fields show the 4 most recent operational fault codes that occurred while cutting or gouging with the cartridge. Operational fault codes are in the format 0-*nn-n*. Refer to page 132.

To see these fields, scroll down to the **CARTRIDGE DATA 2** screen.

Power Supply Data screen

Go to the Power Supply Data screen (**POWER SUPPLY DATA**) to see information about plasma power supply performance and use.

1. Select [1] on the main menu screen.
2. Select [2] to go to the **POWER SUPPLY DATA** screen.

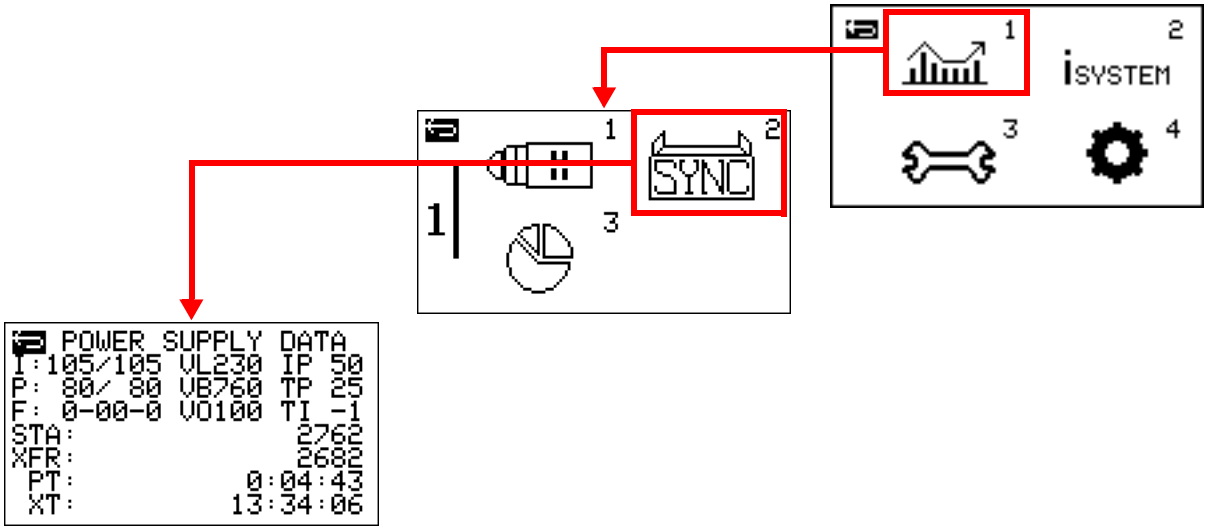

I – This field shows the set current followed by the live output current (in amperage).

P – This field shows the inlet set pressure followed by the actual output gas pressure (in psi).

F – This field shows the active fault code (if any).

VL – This field shows the input voltage.

VB – This field shows the bus voltage (VBUS).

VO – This field shows the arc voltage.

IP – This field shows the boost PFC IGBT current in amperage. This field shows on the screen for CSA and for Powermax105 SYNC 230 V – 400 V CE models only.

TP – This field shows the boost PFC IGBT temperature in Celsius. This field shows on the screen for CSA and for Powermax105 SYNC 230 V – 400 V CE models only.

TI – This field shows the inverter IGBT temperature in Celsius.

STA – This field shows the total number of torch starts the plasma power supply has done in its life.

XFR – This field shows the total number of arc transfers the plasma power supply has done in its life.

PT – This field shows the cumulative pilot arc time in hours, minutes, and seconds (*HH:MM:SS*) that the plasma power supply has had in its life.

XT – This field shows the cumulative arc transfer time in hours, minutes, and seconds (*HH:MM:SS*) that the plasma power supply has had in its life.

Cartridge History screen

Go to the Cartridge History screen (**CARTRIDGE HISTORY**) to see cumulative data for different types of cartridge starts for the life of the plasma power supply.

1. Select [1] on the main menu screen.
2. Select [3] to go to the **CARTRIDGE HISTORY** screen.

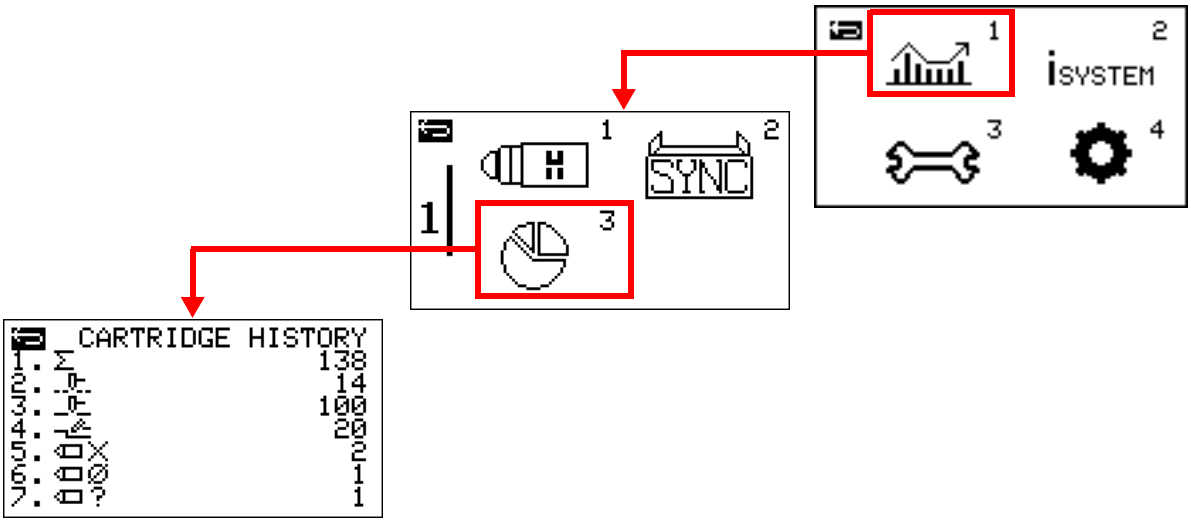

Σ – This field shows the total number of pilot arc starts for all cartridge types that the plasma power supply has done in its life.

– This field shows the total number of Hypertherm cutting cartridge starts that the plasma power supply has done in its life while in Expanded Metal mode.

– This field shows the total number of Hypertherm cutting cartridge starts that the plasma power supply has done in its life while in Cut mode.

– This field shows the total number of Hypertherm gouging cartridge starts that the plasma power supply has done in its life.

– This field shows the total number of pilot arc starts that the plasma power supply has done while cartridges were in an end-of-life condition. Refer to page 80.

– This field shows the total number of pilot arc starts that the plasma power supply has done while there was no communication between the plasma power supply and the torch or cartridge. For example, the value in this field includes pilot arc starts when the system is in an 0-98-*n* fault condition or when the system is set to basic mode.

– This field shows the total number of pilot arc starts that the plasma power supply has done while an unrecognized type of cartridge was used.

LCD/Control PCB Information screen

Go to the LCD/Control PCB Information screen (**LCD/CTRL BD INFO**) to see service-related information about the firmware on the plasma power supply's LCD/control PCB. The technical information on this screen is for qualified service technicians to refer to when troubleshooting.

1. Select iSYSTEM 2 on the main menu screen.
2. Select LCD 1 to go to the **LCD/CTRL BD INFO** screen.

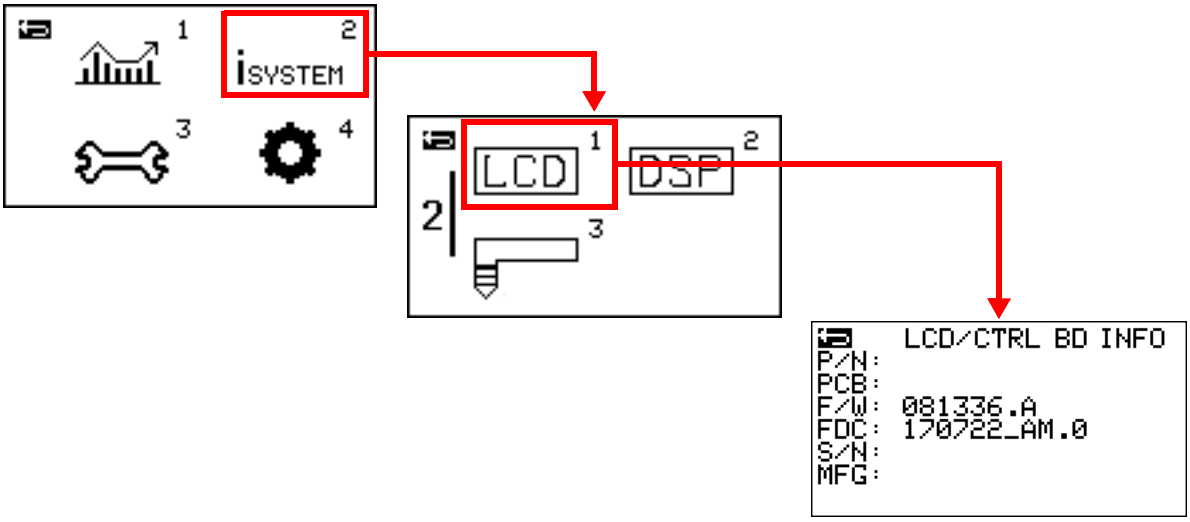

DSP PCB and Power PCB Information screen

Go to the DSP PCB and Power PCB Information screen (**DSP&PWR BD INFO**) to see service-related information about the plasma power supply's power PCB and the firmware on the digital signal processing (DSP) PCB. The technical information on this screen is for qualified service technicians to refer to when troubleshooting.

1. Select iSYSTEM 2 on the main menu screen.

2. Select DSP 2 to go to the **DSP&PWR BD INFO** screen.

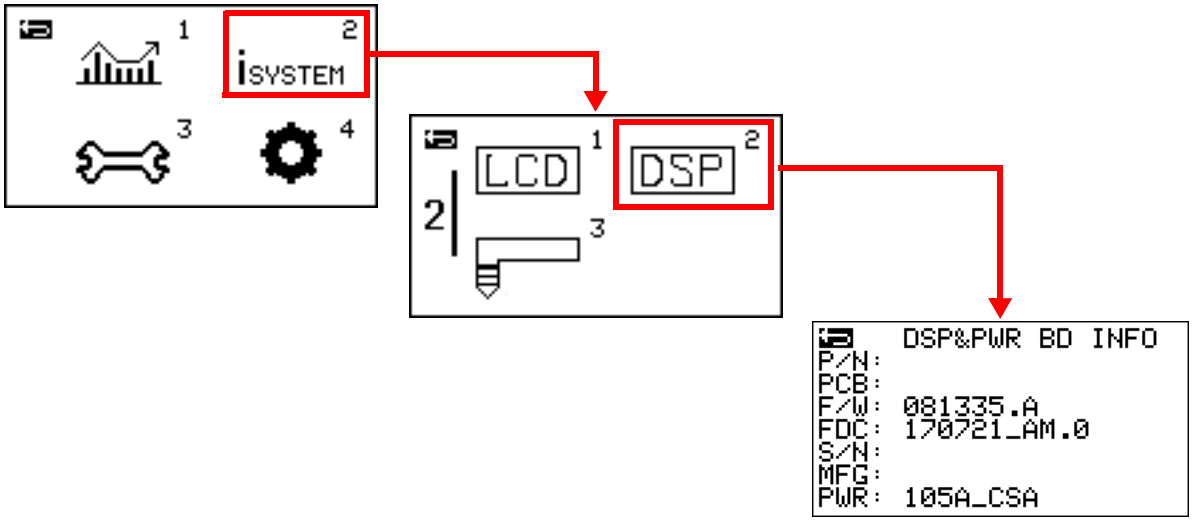

Torch PCB Information screen

Go to the Torch PCB Information screen (**TORCH BD INFO**) to see service-related information about the SmartSYNC torch that is connected to the plasma power supply. The technical information on this screen is for qualified service technicians to refer to when troubleshooting.

The plasma power supply cannot show torch information for a non-SmartSYNC torch.

1. Select iSYSTEM 2 on the main menu screen.
2. Select 3 to go to the **TORCH BD INFO** screen.

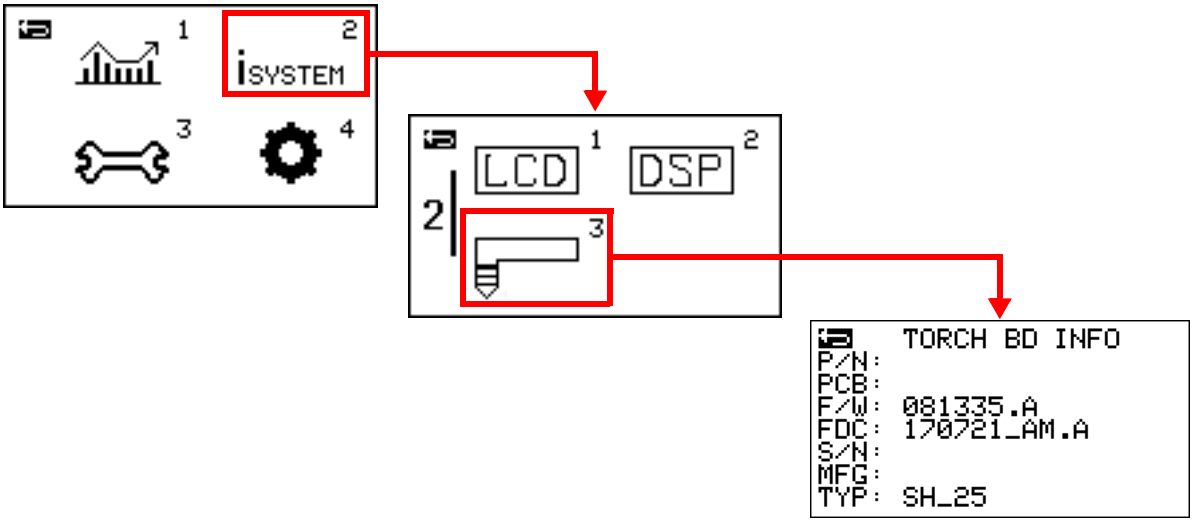

TYP – This field shows the torch type followed by the length of the torch lead in feet.

- **SH** = SmartSYNC hand torch
- **SM** = SmartSYNC machine torch
- **BH** = Hand torch, and the plasma power supply is in basic mode. Refer to page 155.
- **BM** = Machine torch, and the plasma power supply is in basic mode. Refer to page 155.

Radio Frequency (RF) Data screen

Go to the Radio Frequency Data screen (**RF DATA**) to see service-related information about radio frequency (RF) settings and logs. The technical information on this screen is for qualified service technicians to refer to when troubleshooting.

To see values on this screen, make sure that there is a cartridge installed on the torch and that the torch is set to the green “ready to fire” (✓) position.

1. Select 3 on the main menu screen.

2. Select 2 to go to the **RF DATA** screen.

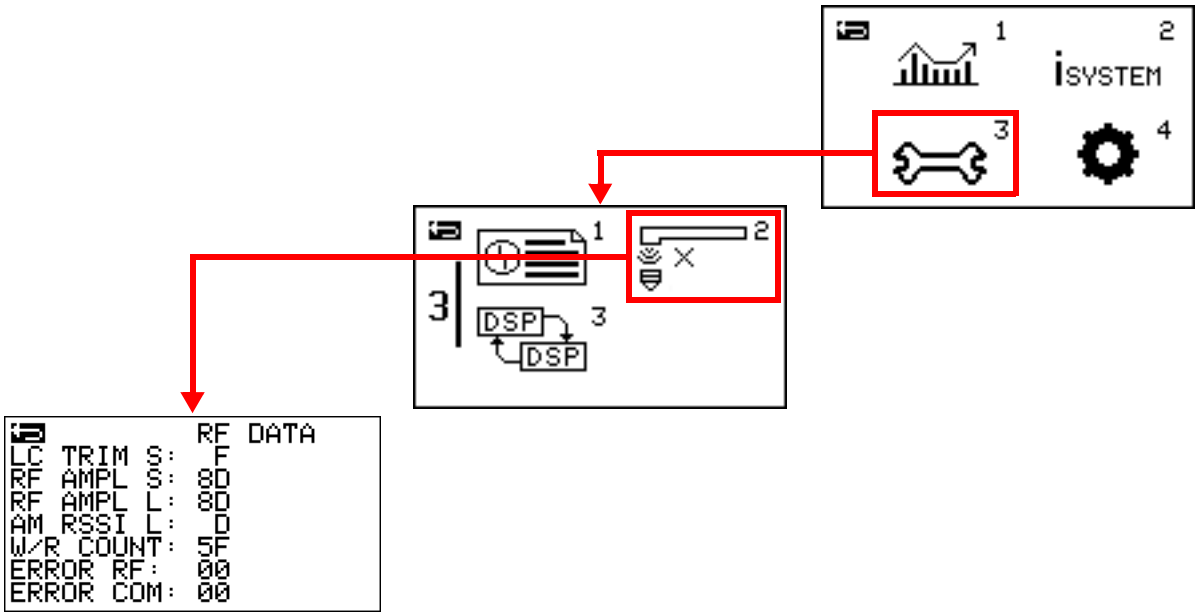

Cut Counters Transfer screen

Go to the Cut Counters Transfer screen (**CUT COUNTERS**) to do a transfer of the plasma power supply's cut counter data before installing a new DSP PCB. This screen is for qualified service technicians.

For instructions on how to use this screen, refer to the *Powermax65/85/105 SYNC DSP PCB Replacement* Field Service Bulletin (810950).

1. Select 3 on the main menu screen.

2. Select DSP 3 DSP to go to the **CUT COUNTERS** screen.

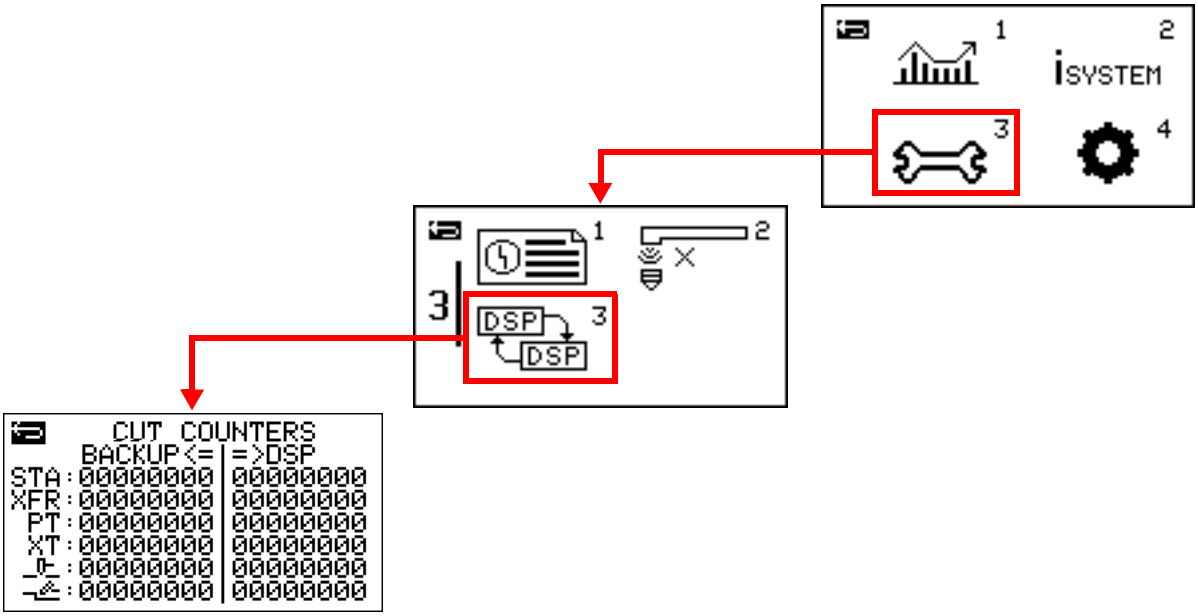

CNC Interface Settings screen

Use the CNC Interface Settings screen (**CNC INTERFACE**) to set parameters for serial communication. This screen is for qualified service technicians.

For instructions on how to use this screen, refer to the *Powermax65/85/105 SYNC Mechanized Cutting Guide* (810480).

1. Select ⚙ 4 on the main menu screen.

2. Select CNC 2 to go to the **CNC INTERFACE** screen.

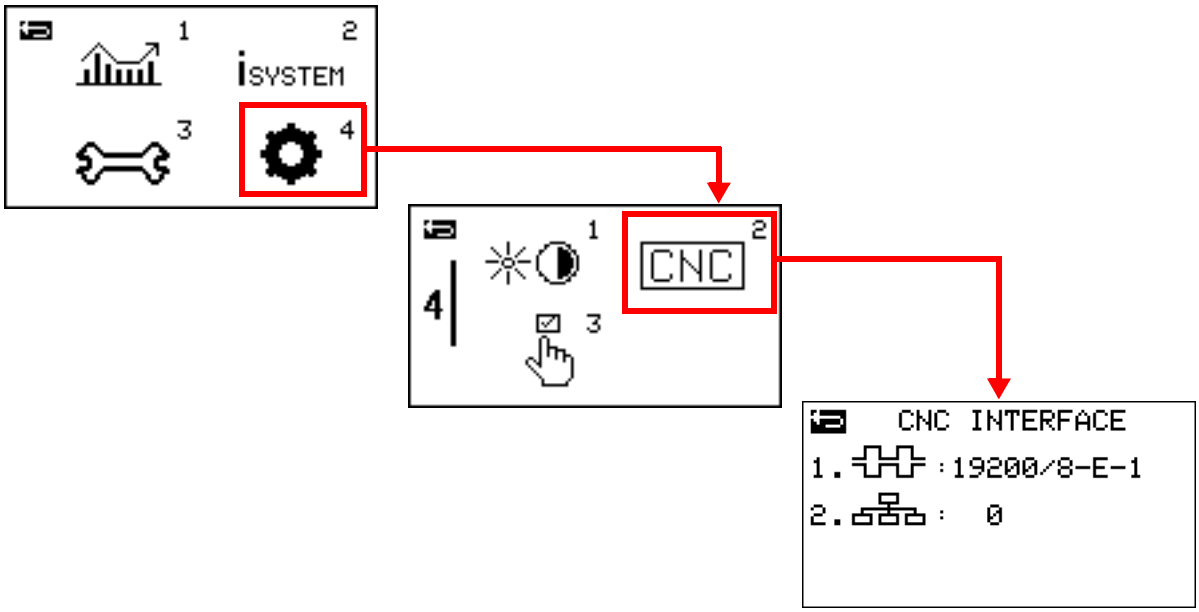

7 Complete Regular Maintenance Tasks

Examine the plasma power supply and torch

⚠ WARNING

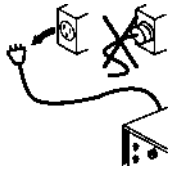

ELECTRIC SHOCK CAN KILL

Disconnect electric power before doing installation or maintenance. You can get a serious electric shock if electric power is not disconnected. Electric shock can seriously injure or kill you.

All work that requires removal of the plasma power supply outer cover or panels must be done by a qualified technician.

Refer to the *Safety and Compliance Manual* (80669C) for more safety information.

⚠ WARNING

RISK OF BURNS AND ELECTRIC SHOCK – USE INSULATED GLOVES

Always put on insulated gloves when changing the cartridges. The cartridges get very hot during cutting and can cause severe burns.

Touching the cartridges can also cause electric shock if the plasma power supply is ON and the torch-lock switch is not in the yellow lock (**X**) position.

⚠ WARNING

INSTANT-ON TORCHES – PLASMA ARC CAN CAUSE INJURY, BURNS

Ignition of the plasma arc occurs immediately when you pull the torch trigger. Before changing the cartridge, one of the following steps is necessary. Whenever possible, complete the first step.

- Set the power switch on the plasma power supply to OFF (**O**).

  OR

- Move the torch-lock switch to the yellow lock (**X**) position. Pull the trigger to make sure that the torch does not fire a plasma arc.

Every use

Plasma power supply	Torch
1 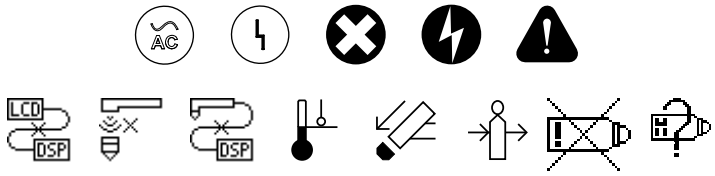 Examine the indicator LEDs and correct any fault conditions. Refer to Fault codes on page 132.	3 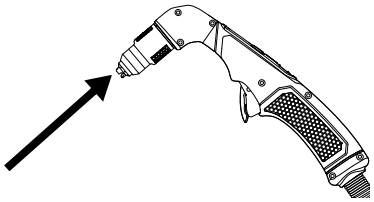 Examine the cartridge for correct installation and for wear. Refer to Signs that a cartridge is near end-of-life on page 107 and Cartridge maintenance on page 176.
2 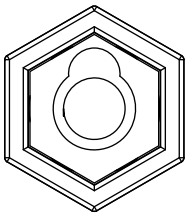 To prevent overheating, do the following: ▪ Examine the work lead connector to make sure that it is fully connected to the plasma power supply and is not loose. Make sure that you turn the connector clockwise approximately 1/4 turn until the connector is fully engaged and locked in position. ▪ Do a check of the plug on the work lead. When a plug is replaced, damage to the wire inside the plug can occur. If the plug on the work lead has been replaced, look for damage.	

Every cartridge change or weekly (whichever is more frequent)

Torch	
Do a test of the torch-lock switch to make sure that it correctly locks and unlocks the torch. Lock the torch ❶: ▪ With the plasma power supply ON, move the torch-lock switch to the **yellow** lock (**X**) position. ▪ Point the torch away from yourself and others. ▪ **Hand torch:** Pull the trigger to make sure that the torch does not fire. ▪ **Machine torch:** Send a START / STOP command from the CNC. Make sure that the torch does not fire. Unlock the torch ❷: ▪ Move the torch-lock switch to the **green** "ready to fire" (✓) position. ▪ Point the torch away from yourself and others. ▪ **Hand torch:** Pull the trigger 1 time. Make sure that the torch does not fire. Make sure that multiple puffs of air quickly come from the torch instead. Refer to Warning puffs of air (hand torches) on page 68. ▪ **Machine torch:** Send a START / STOP command from the CNC. Make sure that the torch fires a plasma arc. Have a qualified service technician replace the torch-lock switch if it is not working correctly. Speak to your distributor or authorized repair facility.	❶ 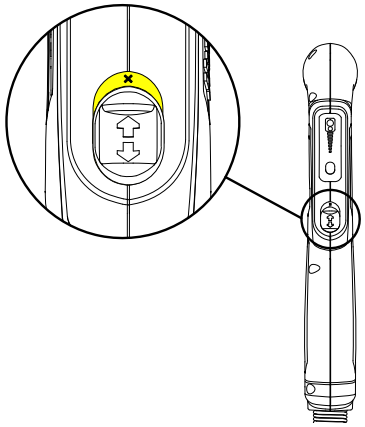 ❷ 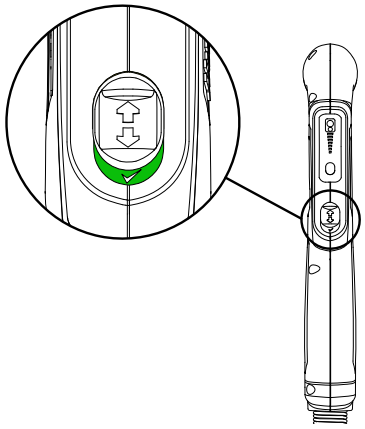

Every 3 months

Plasma power supply	Torch
1 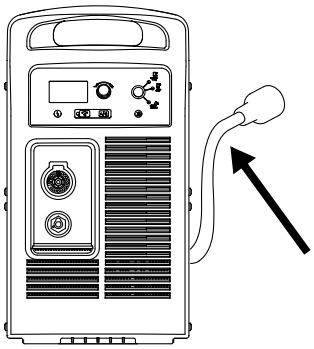 Examine the power cord and plug. Replace them if they are damaged. Refer to the *Powermax65/85/105 SYNC Parts Guide* (810490).	3 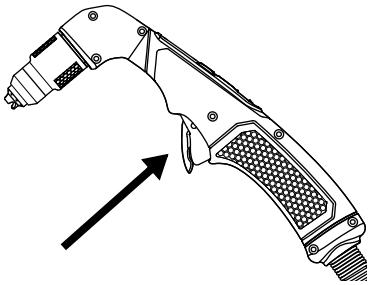 **Hand torches:** Examine the trigger for damage. **Hand and machine torches:** Examine the torch body for cracks and exposed wires. Have a qualified service technician replace any damaged parts. Speak to your distributor or authorized repair facility.
2 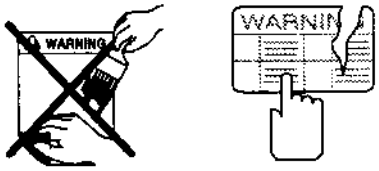 Examine the labels. Replace any damaged labels. Refer to the *Powermax65/85/105 SYNC Parts Guide* (810490).	4 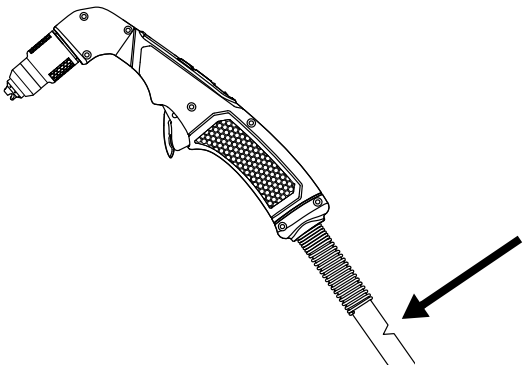 Examine the torch lead. Have a qualified service technician replace it if it is damaged. Speak to your distributor or authorized repair facility.

Cartridge maintenance

To help keep a cartridge operating correctly, do the following. For information on cartridge life, refer to Get the most out of your cartridges on page 106.

- Carefully remove molten metal that collects in the castellations of drag-cutting cartridges. **Do not push the unwanted material inside the nozzle or shield.**
- Carefully remove molten metal that causes a blockage of the holes in the shield that are necessary for airflow. **Do not push the unwanted material inside the nozzle or shield.**
- Examine the O-ring on the torch body. If the O-ring is cracked or worn, replace it. If the O-ring is dry, or if it is not easy to install the cartridge, apply a thin layer of silicone lubricant on the O-ring and the threads. Make sure that the O-ring is shiny, but do not apply too much lubricant.

Figure 7 – Components to examine

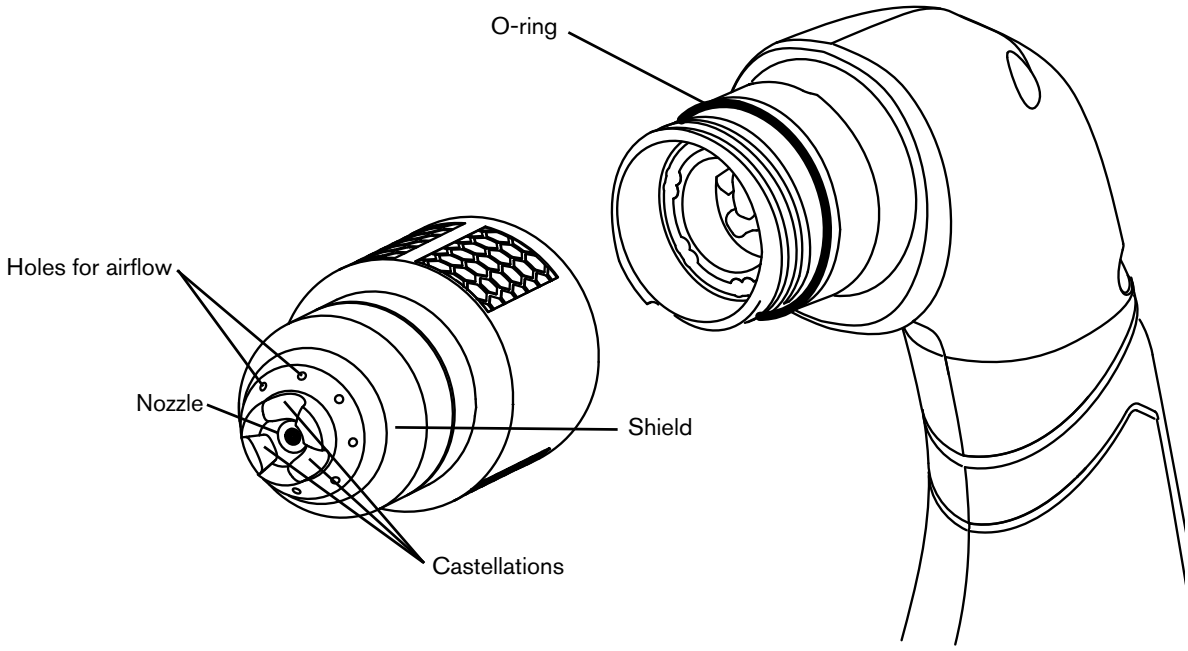

Examine the air filter bowl and filter element

It is extremely important to keep a clean, dry gas line to do the following:

- Prevent oil, water, dirt, and other contaminants from causing damage to internal components.
- Get optimal cut quality and consumable life.

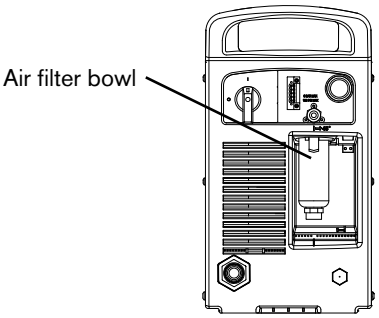

Drain water from the bowl (if necessary)

A small amount of water can collect in the bottom of the filter bowl. The filter bowl automatically removes the water when enough water collects to engage the float mechanism inside the bowl.

To manually drain water from the bowl, remove the nut at the bottom of the bowl with your hand.

To prevent damage to the plastic nut, do not use a wrench or other tool.

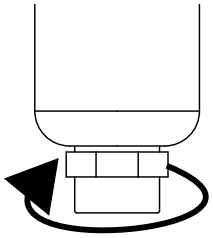

Remove the air filter bowl and filter element

1. Set the power switch on the plasma power supply to OFF (**O**).
2. Disconnect the power cord from electrical power.
3. Disconnect the gas supply from the rear of the plasma power supply.
4. Hold the filter bowl with your right hand. With the index finger of your left hand, push down the latch ❶ and turn the filter bowl approximately 45 degrees to the right.
5. Pull the filter bowl straight down to remove.

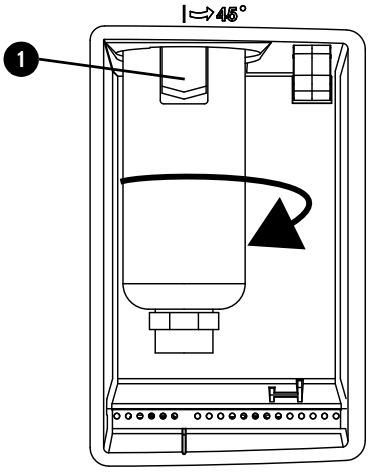

6. Gently turn and pull the filter element ❷ out of the filter bowl. Be careful not to damage the O-ring ❸ at the top of the bowl.

Examine the air filter bowl and O-ring

Example of a dirty air filter bowl

NOTICE

DIRTY, OILY AIR CAN CAUSE DAMAGE TO THE AIR FILTER BOWL

Synthetic lubricants containing esters that are used in some air compressors can cause damage to the polycarbonates in the air filter bowl. Add additional gas filtration if necessary.

- Make sure that there is no oil, chemicals, dirt, or other contamination on the filter bowl or O-ring. Contamination can prevent a good seal, causing gas leaks and additional contamination to go through the gas line in the plasma power supply and torch. Over time, contamination can cause damage to internal components.
- Make sure that the O-ring is not cracked or damaged.
- Clean the air filter bowl by removing any oil, dirt, or other contaminants. Yellow material on the filter bowl often shows that oil is getting into the gas supply line.

- Replace the air filter bowl and O-ring as necessary. Refer to the *Powermax65/85/105 SYNC Parts Guide* (810490). Also refer to Replace the air filter bowl, O-ring, and filter element on page 179.
- If you use an external filtration system, such as the Eliminizer filter kit, also do a check of that filter regularly for necessary maintenance or cleaning.

Examine the filter element

- Do a check of the filter element inside the air filter bowl regularly, especially in environments that are very dusty or very warm and humid.
- Replace the filter element when it is dirty or starts to deteriorate. Refer to the *Powermax65/85/105 SYNC Parts Guide* (810490). Also refer to Replace the air filter bowl, O-ring, and filter element on page 179.

Clean filter element

Replace the air filter bowl, O-ring, and filter element

1. To replace the filter element, twist and pull the plastic fittings ❶ away from the filter element, approximately a 1/4 turn. Set the fittings aside. Discard the used filter element.

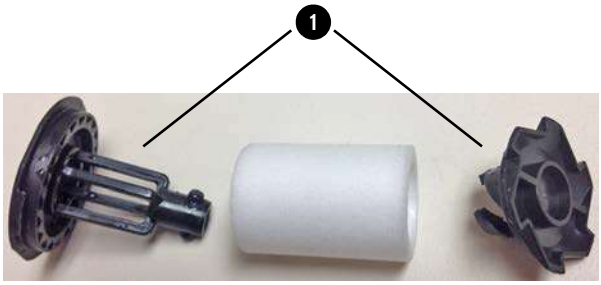

2. Put the new air filter element in the plastic fittings. Twist the plastic fittings until they lock together, approximately a 1/4 turn.
3. To replace the O-ring, discard the used O-ring, and put the new O-ring at the top of the filter bowl.
4. To replace the air filter bowl, discard the used air filter bowl.

5. Put the filter element inside the air filter bowl. Push down on the top plastic fitting until you hear a click.

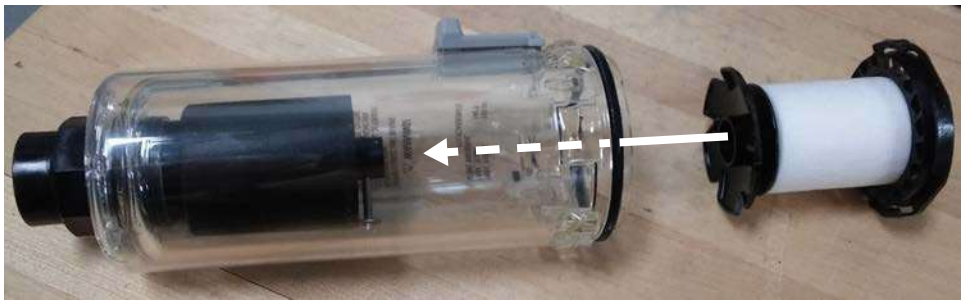

Install the air filter bowl and filter element
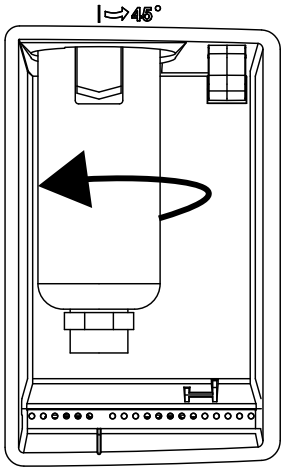
1. Vertically align the filter bowl and push it up into the receptacle in the rear panel.
2. Turn the filter bowl 45 degrees to the left until you hear a click.
3. Reconnect the gas supply to the rear of the plasma power supply.
4. Reconnect the power cord.